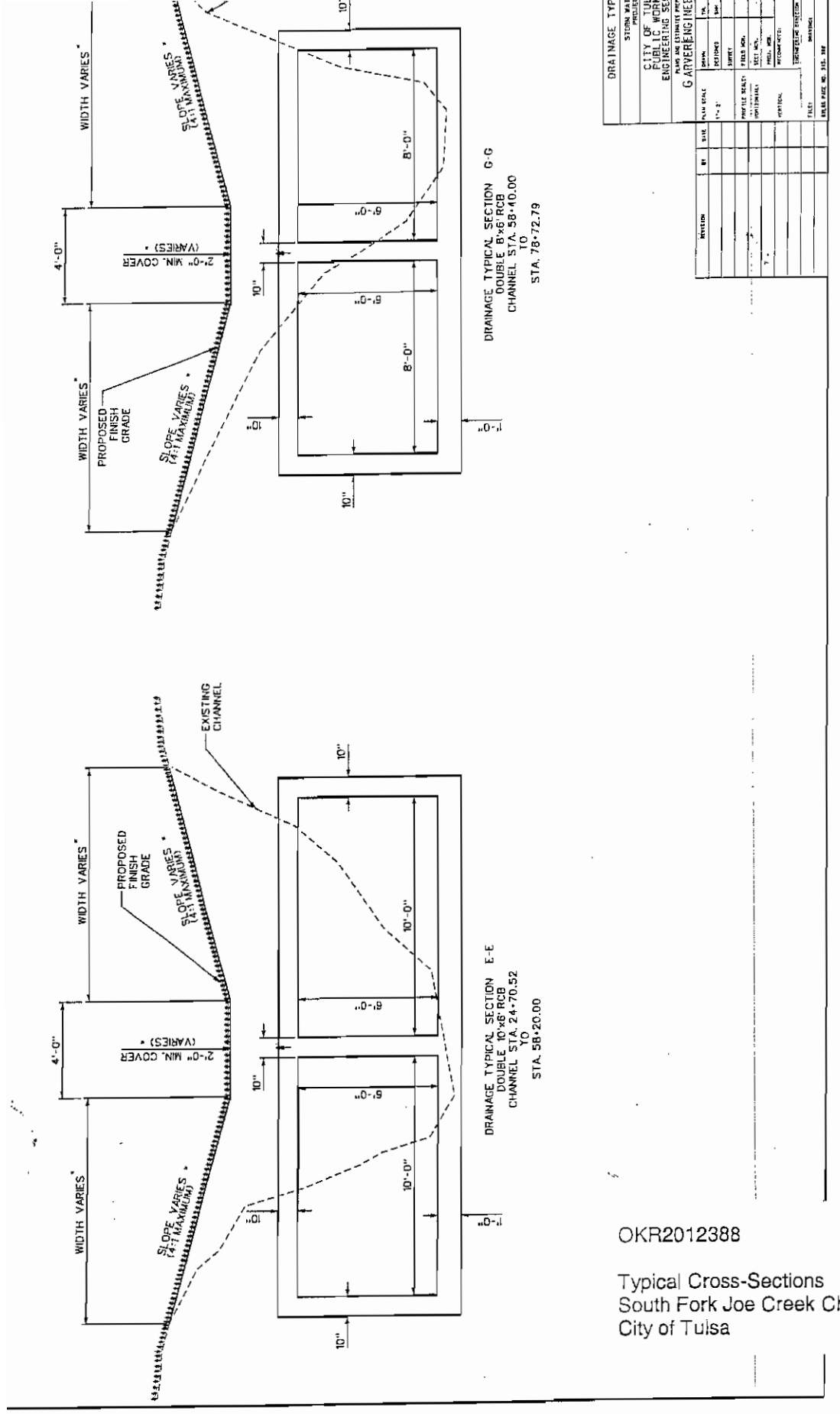

OKR2012388 12388-2

Typical Cross-Sections
South Fork Joe Creek Channel Modification
City of Tulsa