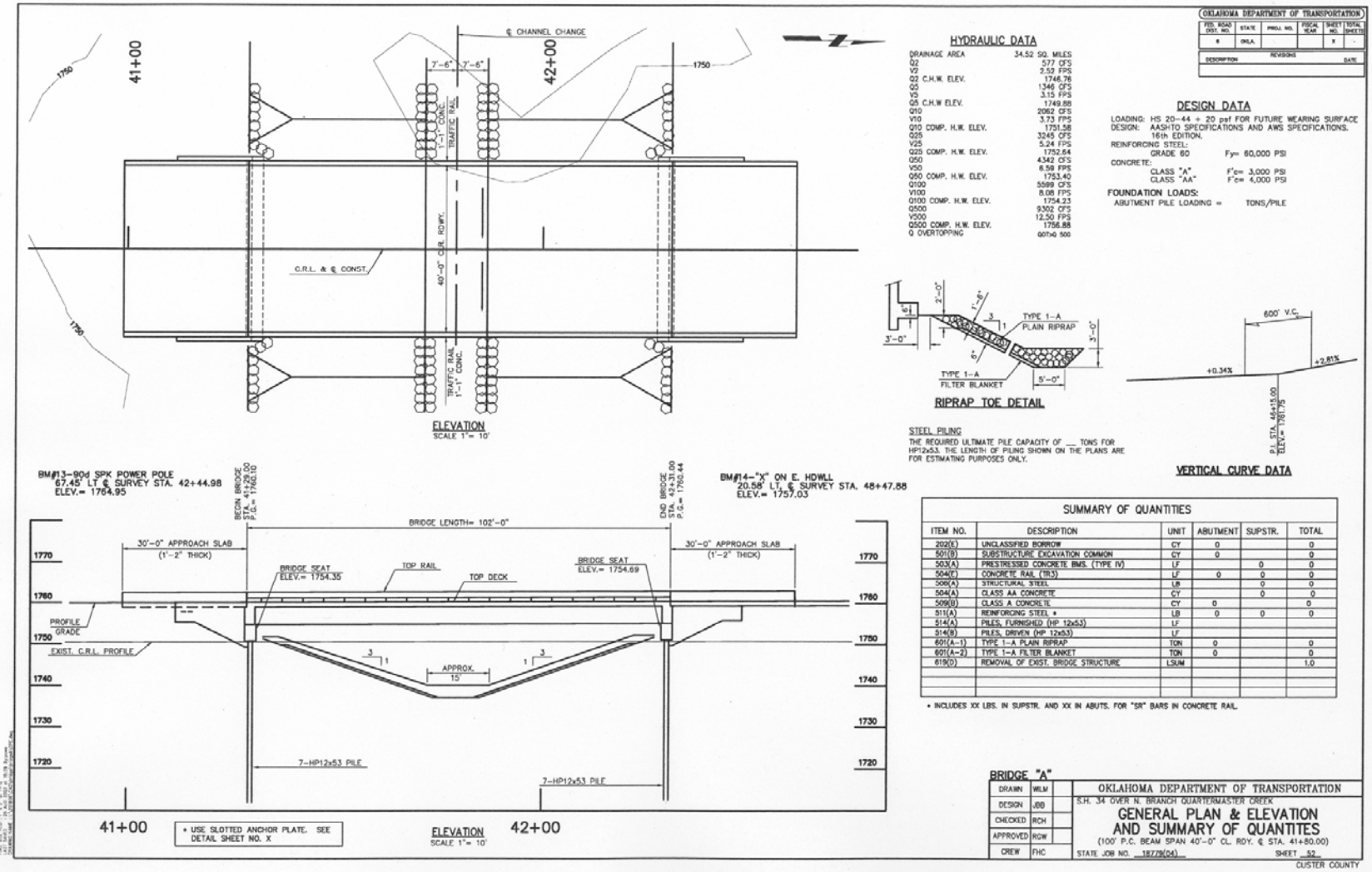

SUMMARY OF QUANTITIES

ITEM NO.	DESCRIPTION	UNIT	ABUTMENT	SUPSTR.	TOTAL
202(E)	UNCLASSIFIED BORROW	CY	0		0
501(B)	SUBSTRUCTURE EXCAVATION COMMON	CY	0		0
503(A)	PRESTRESSED CONCRETE BMS. (TYPE IV)	LF		0	0
504(E)	CONCRETE RAIL (TR3)	LF	0	0	0
506(A)	STRUCTURAL STEEL	LB		0	0
504(A)	CLASS AA CONCRETE	CY		0	0
509(B)	CLASS A CONCRETE	CY	0		0
511(A)	REINFORCING STEEL *	LB	0	0	0
514(A)	PILES, FURNISHED (HP 12x53)	LF			
514(B)	PILES, DRIVEN (HP 12x53)	LF			
601(A-1)	TYPE 1-A PLAIN RIPRAP	TON	0		0
601(A-2)	TYPE 1-A FILTER BLANKET	TON	0		0
619(D)	REMOVAL OF EXIST. BRIDGE STRUCTURE	LSUM			1.0

* INCLUDES XX LBS. IN SUPSTR. AND XX IN ABUTS. FOR "SR" BARS IN CONCRETE RAIL.

OKR2014640
MR. TRENTON A. HURST
OKLAHOMA DEPARTMENT OF TRANSPORATION
NORTH BRANCH QUARTERMASTER CREEK
BRIDGE REPLACEMENT
ENCLOSURE 5 OF 5