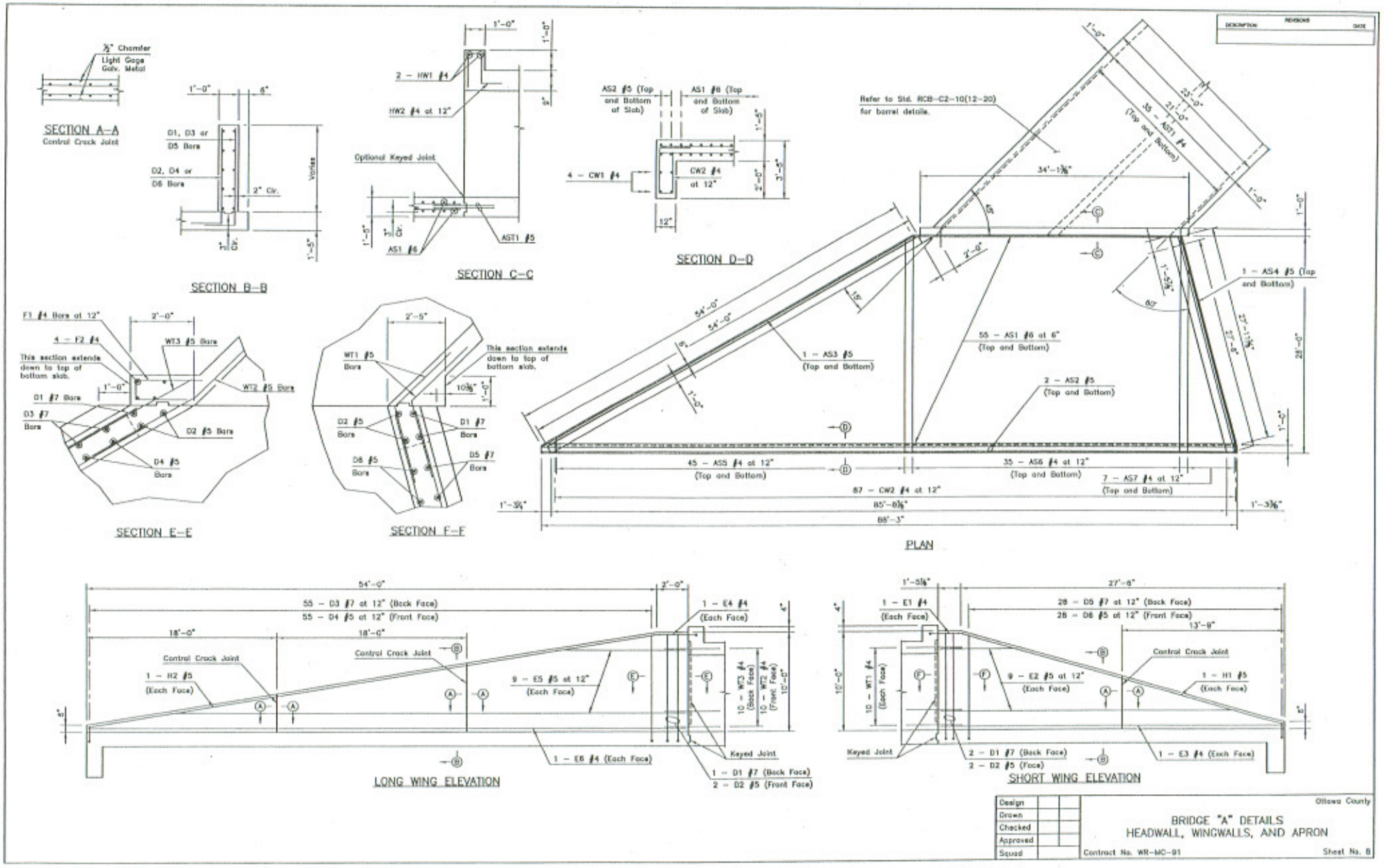

OKR2015035
OKLAHOMA TURNPIKE AUTHORITY
UNNAMED TRIBUTARY
ENCLOSURE 5 OF 5