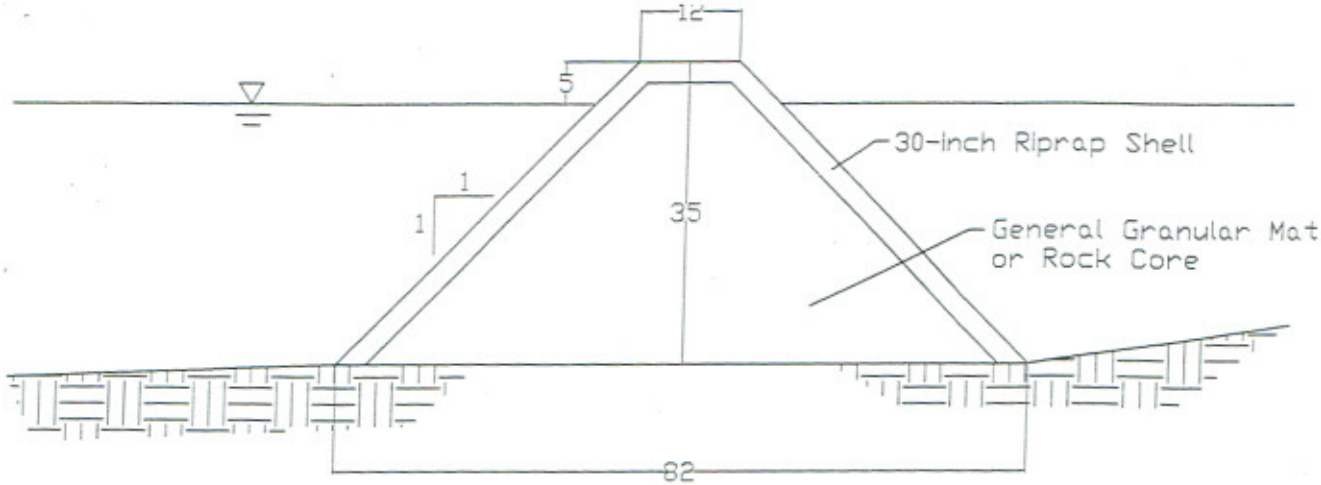

Section A-A

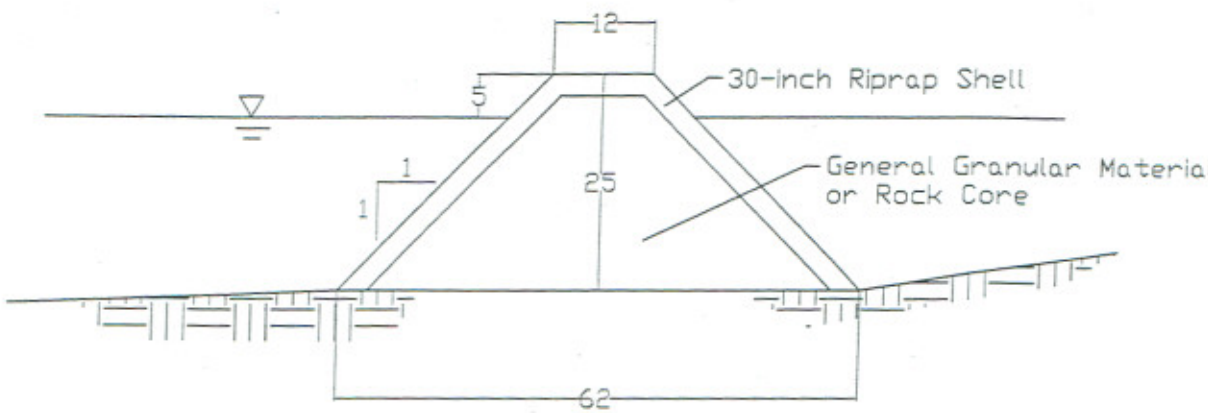

Section B-B

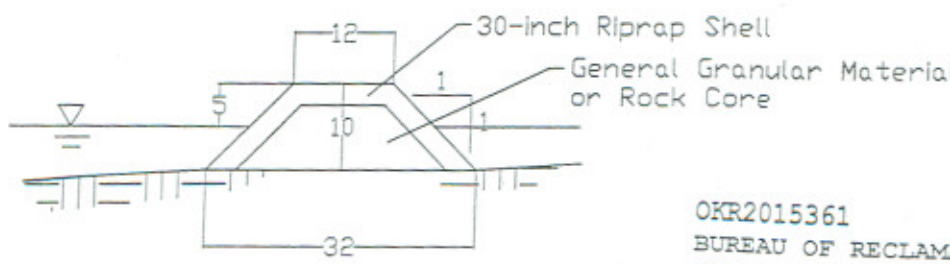

Section C-C

OKR2015361
BUREAU OF RECLAMATION
FORT COBB RESERVOIR
ROCK JETTY
ENCLOSURE 3 OF 3