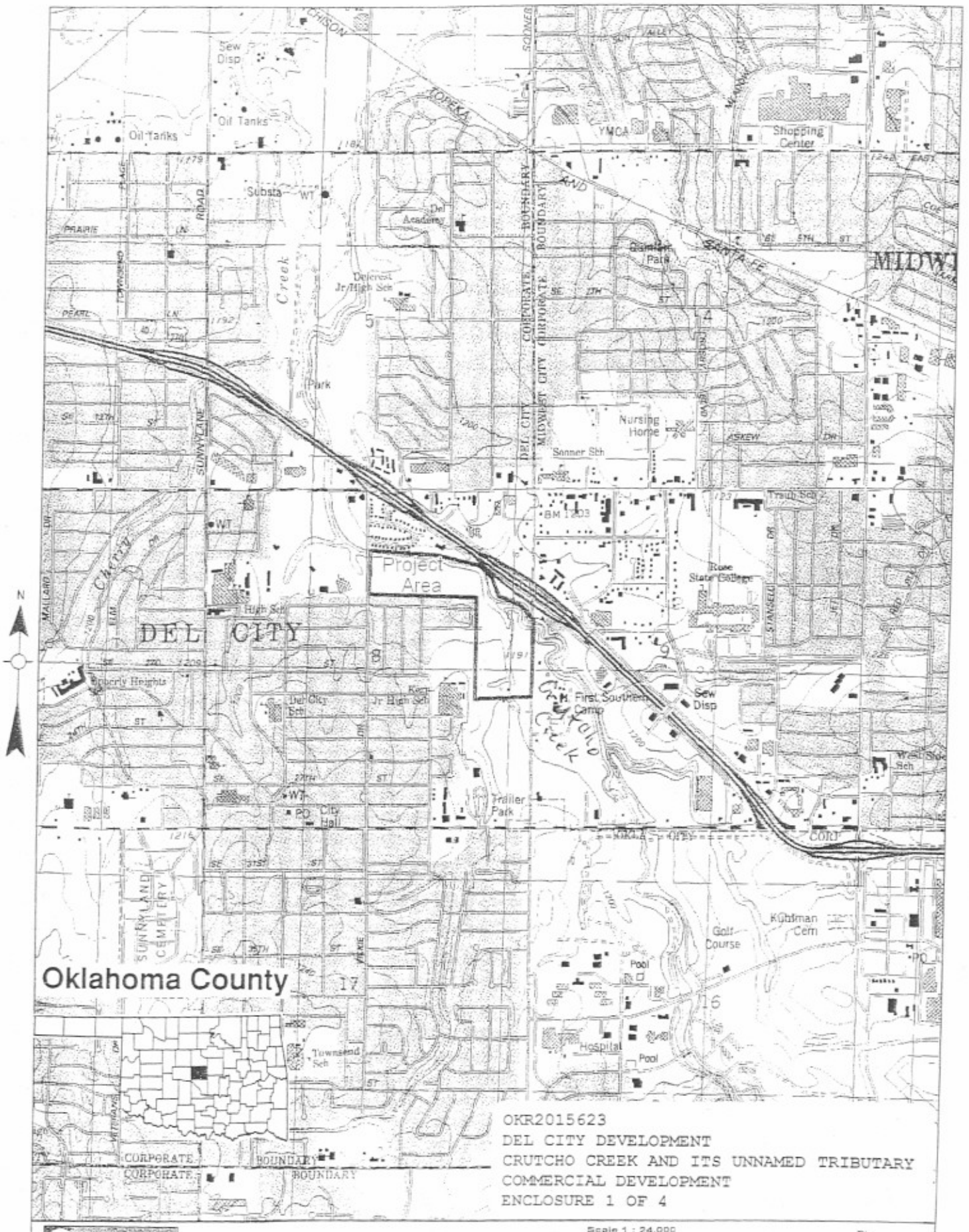

OKR2015623
DEL CITY DEVELOPMENT
CRUTCHO CREEK AND ITS UNNAMED TRIBUTARY
COMMERCIAL DEVELOPMENT
ENCLOSURE 1 OF 4

© 2002 DeLorme. 3-D TopoQuads ®. Data copyright of content owner.
www.delorme.com

Scale 1 : 24,000
1" = 2000 ft

OKR2015623
DEL CITY DEVELOPMENT
CRUTCHO CREEK AND ITS UNNAMED TRIBUTARY
COMMERCIAL DEVELOPMENT
ENCLOSURE 2 OF 4

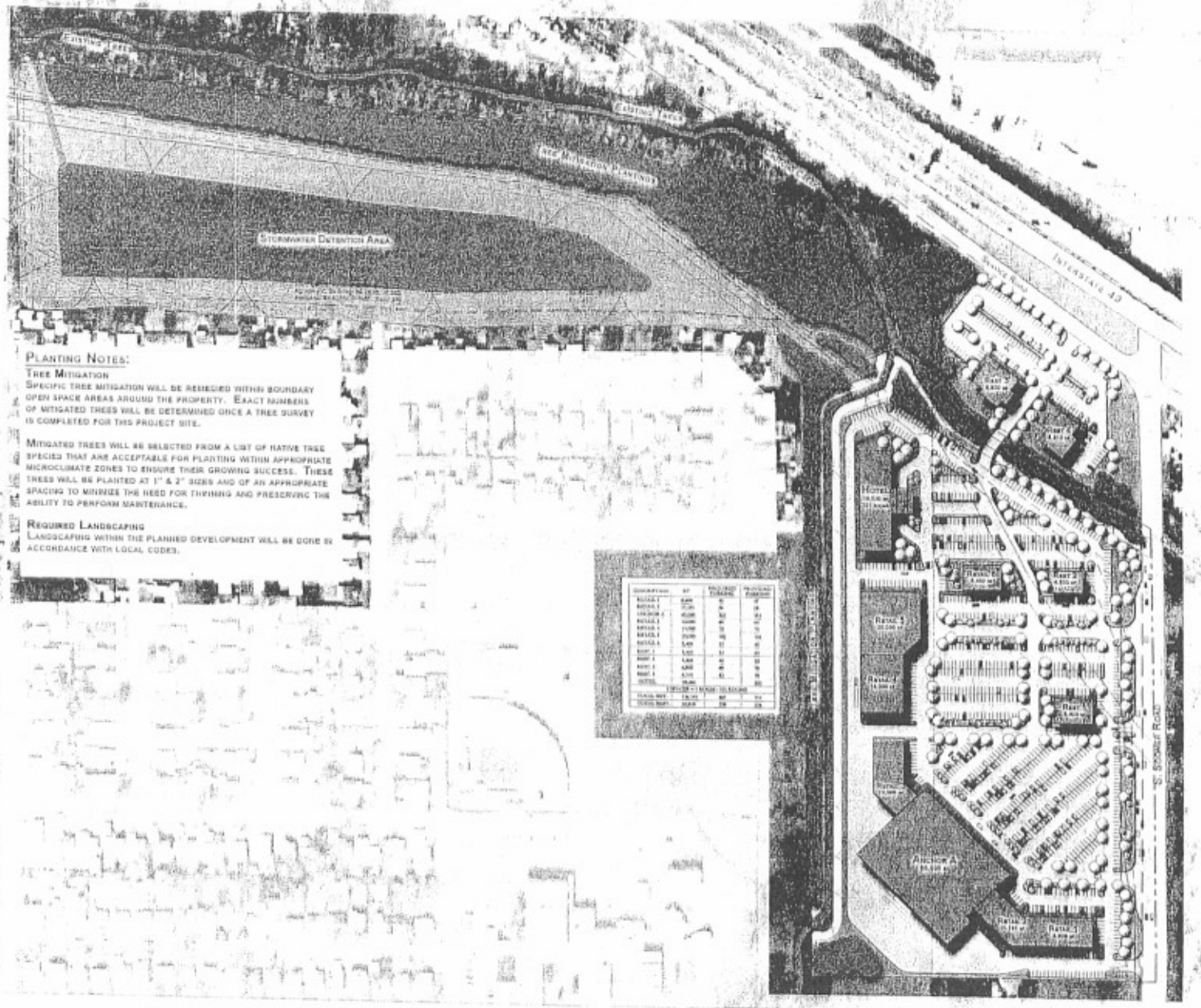

Planting Notes:

Tree Mitigation

Specific tree mitigation will be remedied within boundary open space areas around the property. Exact numbers of mitigated trees will be determined once a tree survey is completed for this project site.

Mitigated trees will be selected from a list of native tree species that are acceptable for planting within appropriate microclimate zones to ensure their growing success. These trees will be planted at 1" & 2" sizes and of an appropriate spacing to minimize the need for thinning and preserving the ability to perform maintenance.

Required Landscaping

Landscaping within the planned development will be done in accordance with local codes.

OKR2015623
DEL CITY DEVELOPMENT
CRUTCHO CREEK AND ITS UNNAMED TRIBUTARY
COMMERCIAL DEVELOPMENT
ENCLOSURE 3 OF 4

Carter :: Burgess

The Shops at Del City
Part of East Half, Sec 8, T 11 N, R 2 W, IM
Del City, Oklahoma

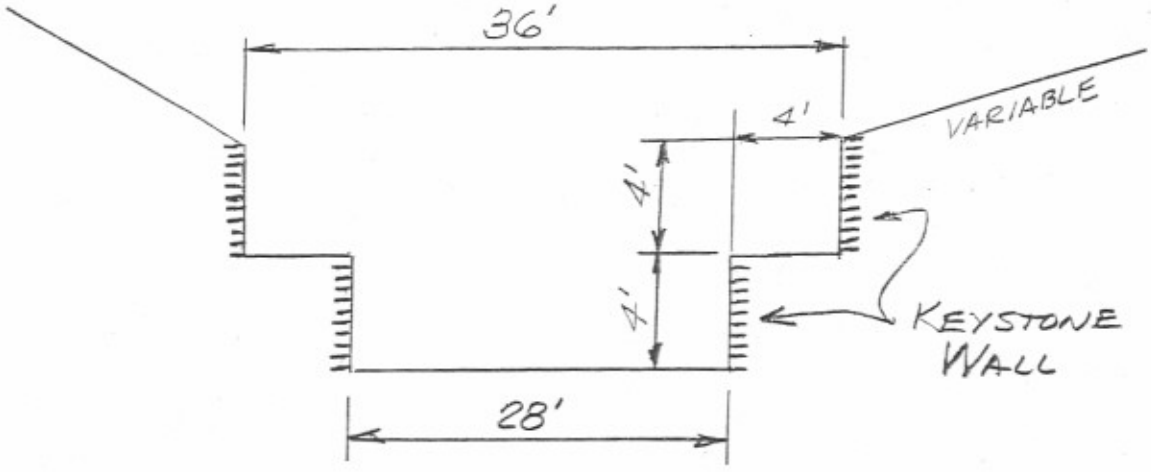

PROPOSED CHANNEL SECTION
TRIBUTARY "B"
CRUTCHO CREEK
DEL CITY, OKLA

OKR2015623
DEL CITY DEVELOPMENT
CRUTCHO CREEK AND ITS UNNAMED TRIBUTARY
COMMERCIAL DEVELOPMENT
ENCLOSURE 4 OF 4