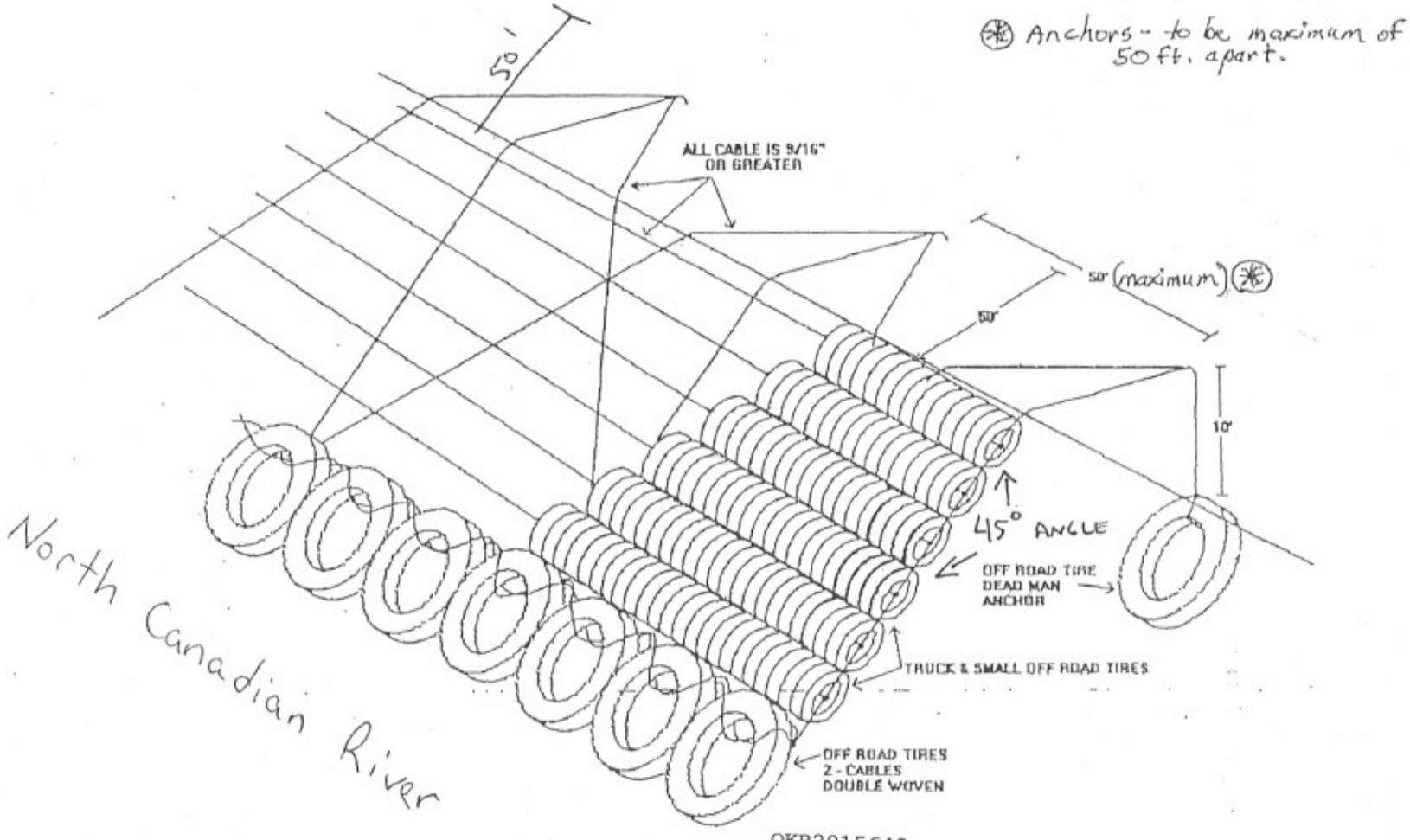

OKR2015640
MR. JOHN STOTTS
NORTH CANADIAN RIVER
TIRE MATTRESS
ENCLOSURE 2 OF 2