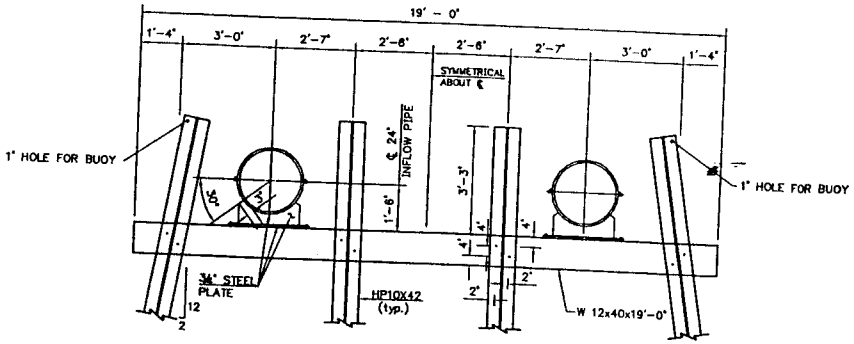

FRONT ELEVATION

2' 0 2' 4'

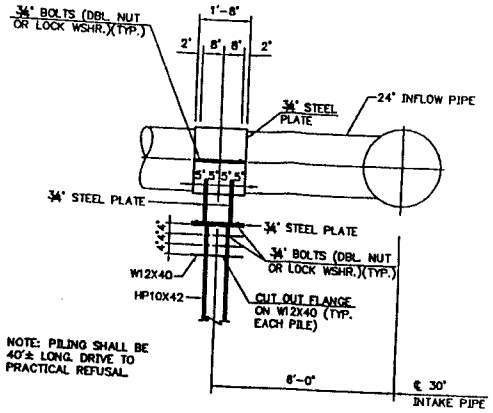

END ELEVATION

2' 0 2' 4'

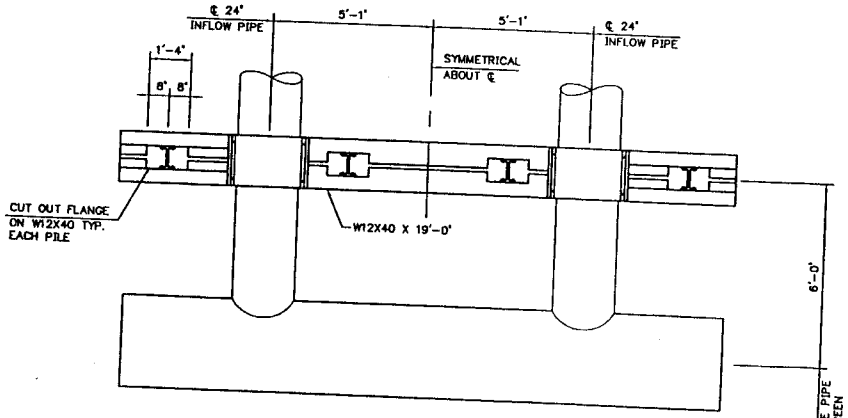

PLAN

2' 0 2' 4'

DATE 6/25/01	INFLOW PIPES & SUPPORT DETAILS
DRAWN BY: WLC	MUSKOGEE COUNTY EAGLE ENERGY WATER SUPPLY PROJ
SCALE AS SHOWN	TRIAD DESIGN GROUP
SHEET 20	

W:\E085-0\INTAKE-DET3.dwg 07/09/2001 10:05 Saved by: jmp

OKR2011242
ENERGETIX
ARKANSAS RIVER
INTAKE STRUCTURE
ENCLOSURE 7 OF 8