CHAPTER VI

ELECTRICAL

Table of Contents

1. GENERAL
- 1.1 Criteria
- 1.2 References: Industry Codes and Standards
- 1.3 References: Government Criteria
- 1.4 Metrication
  - 1.4.1 Conduit
  - 1.4.2 Wire Size
  - 1.4.3 Light Fixtures
  - 1.4.3.1 Suspended Ceiling Systems
  - 1.4.3.2 Recessed Lighting Fixtures Specifications
  - 1.4.4 Metric Illumination
  - 1.4.5 Fiber Optics
  - 1.4.6 Exterior Aerial Distribution
- 1.5 Architectural Coordination
- 1.6 Economics
- 1.7 Design Analysis
  - 1.7.1 Project Definitions and Concept Submittals
  - 1.7.2 Final and Corrected Submittals
  - 1.7.3 Requirements for Medical Facility Design
  - 1.7.4 Equipment
- 1.8 Drawings and Specifications

2. INTERIOR ELECTRICAL
- 2.1 References
- 2.2 Lighting Design Guide
  - 2.2.1 Standard Lighting Fixtures
  - 2.2.2 Lighting Fixture Details
  - 2.2.3 Emergency and Exit Lighting
- 2.3 Receptacle Grounding Requirements
- 2.4 Transient Voltage Surge Suppression (TVSS)
  - 2.4.1 Surge Protection at the Facility Service
  - 2.4.2 Surge Sources Within the Facility
- 2.5 Nonlinear Loads
- 2.6 Voltage Dip Calculations
- 2.7 Dedicated Space for Panelboards
- 2.8 Standard Equipment Sizes
- 2.9 Panelboard Schedules
- 2.10 Description of Safety Switches
- 2.11 Wire Sizes Larger Than No. 12
- 2.13 Conductor Material

2.14 Conductor Derating Factor
2.15 Panelboard Feeder Demand Factor
2.16 Service Entrance Demand Factor
2.17 Short Circuit Calculations
2.18 Ground Fault Protection
2.19 Voltage Drop
2.20 Riser Diagrams
2.21 Fire Alarm Systems
2.22 Telephone Systems
2.23 Details for Engine Generator Set Pads
2.24 Lightning and Static Electricity Protection

3. EXTERIOR ELECTRICAL
3.1 References
3.2 Exterior Electrical Plans
3.3 Power Pole Clearances
3.4 Short Circuit Computations
3.5 Hot Line Work
3.6 High Voltage Substation Grounding
3.7 Surge Arresters
3.8 Open-Type Fusible Cutouts
3.9 Transformer Clearances
3.10 Transformer Loading
3.11 Concrete-Encased Duct for Primary
3.12 Reinforced Concrete-Encased Duct
3.13 Duct Profiles
3.14 Use of Grounding Conductor
3.15 Line Poles
3.16 Standard Details
3.17 Coordination of Primary Devices
3.18 Strength Calculations
3.19 Fence Grounding
3.20 Coordination of Fence Locations and Heights

4. SEISMIC REQUIREMENTS

5. ENERGY CONSERVATION

6. CORROSION CONTROL
6.1 General
3.1.1 Cathodic Protection Required
3.1.2 Cathodic Protection not Required
6.2 Design
3.2.1 Calculations
3.2.2 Existing Cathodic Protection
3.2.3 Insulation

3.2.4 Design Guidance
3.2.5 Typical Cathodic Protection

7. ENGINE-GENERATORS
7.1 Guide Specifications
7.2 Fuel and Load Banks for Testing
7.3 Automatic Transfer Switches
7.4 Engine Generator Set Pad

8. AIRFIELD LIGHTING
   8.1 Guide Specifications
   8.2 Air Force Criteria
   8.3 Army Criteria
   8.4 Revision or Improvement to Existing System

9. UTILITY MONITORING AND CONTROL SYSTEMS
   9.1 TI 5-811-12
   9.2 Design Coordination

10. OTHER SPECIALIZED CONSTRUCTION
   10.1 Army Ordinance Plant
   10.2 POL Areas, Hangers, Tactical Equipment Shops, etc.

11. DESIGN DEFICIENCIES

12. COMPUTER PRINTOUTS

Appendix A Plates E1 thru E33

Appendix B Design Review Checklist

CHAPTER VI

ELECTRICAL

1. **GENERAL**:

1.1 **Criteria**. All electrical work shall be designed in accordance with: the Architect-Engineer's (A-E) contract; all applicable technical manuals (TM for Army and AFM for Air Force); engineer technical letters (ETL); Unified Facilities guide specifications (UFGS); and these instructions. For Military construction, UFC 1-200-01 “Design: General Building Requirements” and TI 800-01 "Design Criteria" is the basic criterion. For Air Force construction, Air Force Manuals (AFM), Regulations (AFR), and Military Handbooks (MIL-HDBK) are the basic criteria. Any conflict between criteria should be reported. Applicable codes, standards, etc., that are not specifically for military design, and that are listed in specifications are required criteria and shall be complied with except where military criteria conflict with the codes, etc. In this case, military criteria will govern. All official USACE engineering regulations, circulars, manuals, and other documents are available form “**Publications of the Headquarters, United States Army Corps of Engineers“** internet site @ http://www.usace.army.mil/inet/usace-docs. Design criteria is also available from Huntsville Engineering and Support Center – “**Techinfo**” internet site @ http://www.hnd.usace.army.mil/techinfo/index.asp.

1.2 **References: Industry Codes and Standards**

1.2.1 American national Standards Institute (ANSI)

1.2.2 American Society for Testing and Materials (ASTM)

1.2.3 American Wood-Preservers’ Association (AWPA)

1.2.4 Unified Facilities Guide Specifications (UFGS)

1.2.5 Institute of Electrical and Electronic Engineers

(IEEE)

1.2.6 Insulated Cable Engineering Association (ICEA)

1.2.7 National Electrical Manufacturers Association (NEMA)

1.2.8 National Fire Protection Association (NFPA)

1.2.8.1 NFPA 70, National Electrical Code, 1999.

1.2.8.2 NFPA 101, Life Safety Code, 1997.

1.2.9 Rural Utilities Services (RUS)

1.2.10 Underwriters Laboratories (UL)

1.2.11 International Building Code (IBC) 2000

1.3 **References: Government Criteria**

1.3.1 Army Regulations

1.3.1.2 AR 385-64, U.S. Army Explosives Safety Program, 1 Feb 2000.

1.3.2 DA Engineering Regulation

1.3.2.1 ER 1110-345-700 Design Analysis, Drawings and Specifications, 30 May 1997.

1.3.3 Department of Army Pamphlets

1.3.3.1 DA PAM 385-64, Ammunition and Explosive Safety Standards.

1.3.4 Military Handbooks (MIL-HDBK)

1.3.4.1 MIL-HDBK-1008 C, Fire Protection for Facilities Engineering, Design, and Construction, 10 Jun. 1997.

1.3.4.2.1 MIL-HDBK-1012/3 (1), Telecommunications Premises Distribution Planning, Design,and Estimating, 01 Nov.1999.

1.3.5 Technical Instructions (TI)

1.3.5.1 TI 800-01, Design Guide, Corps of Engineers, Jyly 1998.

1.3.5.2 TI 809-04, Seismic Design for Buildings, 31 Dec. 1998.

1.3.5.3 TI 811-16, or EI 16E500, Lighting Design, 20 Feb. 1997

1.3.6 Training Manuals

1.3.6.1 TM 5-811-1 / Air Force AF JMAN 32-1080, Electric Power Supply and Distribution, 28 Feb. 1995.

1.3.6.2 TM 5-811-2 / Air Force AFM 88-9, Chapter 2, Electrical Design, Interior Electrical System (Incl. C1). 1 Sep 1983.

1.3.6.3 TM 5-811-3 / Fir Force AFM 88-9, Chapter 3, Electrical Design: Lighting and Static Electricity Protection, 29 Mar. 1985.

1.3.6.4 TM 5-811-5, Army Aviation Lighting, 13 Dec. 1991.

1.3.6.5 TM 5-811-6, Electric Power Plant Supply, 20 Jan. 1984.

1.3.6.6 TM 5-811-7, Electrical Design, Cathodic Protection, 22 Apr. 1985.

1.3.7 Engineering Technical Letters (ETL)

1.3.7.2 TL 1110-3-394, Aircraft Characteristics for Airfield-Heliport Design and Evaluation, 27 Sep. 1991.

1.3.7.3 TL 1110-3-403, Electrical Power Systems for Nonlinear Loads, 30 Jun. 1989.

1.3.7.4 TL 1110-3-412, Transformer Application Guidance, 20 Oct. 1989.

1.3.7.5 TL 1110-3-430, Design of US Army Airfield Aircraft Mooring and Grounding Points for Rotary Wing Aircraft, 23 Sep 1991.

1.3.7.6 TL 1110-3-441, Electronic Ballasts for Fluorescent Lighting Fixtures, 20 Aug. 1992.

1.3.7.7 TL 1110-3-474, Cathodic Protection, 14 Jul. 1995.

1.3.7.8 TL 1110-3-484, Aircraft Hangar Fire Protection Systems, 26 Sep. 1997.

1.3.7.9 TL 1110-3-485, Fire Protection for Helicopter Hangars, 15 Oct. 1997.

1.3.7.10 TL 1110-3-502, Telephone and Network Distribution System Design and Implementation Guide, 1 Mar 2000.

1.3.7.11 TL 1110-9-10 (FR), Cathodic Protection System Using Ceramic Anodes, 5 Jan. 1991.

1.3.8 Unified Facilities Criteria
UFC 1-200-01, Design: General Building Requirements,
31 July 2002.

1.3.9 Southwest Division (SWD) Criteria Letters

1.4 **Metrication**. The metric units used are the International System of Units (SI) adopted by the U.S. Government as described in Chapter I, paragraphs 3 and 4.2.1.

1.4.1 Conduit will not change by switching to metric. It becomes classified by the nominal mm size. Plate E17 gives guidance on substitution of I-P “Pipe/Conduit” to nominal metric mm sizes.

1.4.2 Wire Size will use Awg until availability of ASTM B628, standard metric conductor sizes, is determined.

1.4.3 Light Fixtures. Due to the limited availability of hard metric Recessed Lighting Fixtures (RLF), HQUSACE hard metric or inch-pound substitute (soft metric) RLF in our

metric projects so that they can make the selection based on the total installed price. Specifying RLF in metric projects, construction documents for bids or proposals must ensure that the following steps are taken.

1.4.3.1 Suspended Ceiling Systems should be laid out on a 100 mm module using modular metric RLF dimensions. Suspended ceiling system components are T-bars, wall moldings, hangers, acoustical ceiling tile, recessed air diffusers, grills and registers, and RLF. Contractors should be allowed to use either hard metric or inch-pound products for all components of the suspended ceiling system. Location and details of access panels and other penetrations through ceiling that are critical for the project should be identified as required by UFGS 09510, titled Acoustical Ceilings. In addition, the specific design criteria and the assumptions for lighting should be noted on the drawings to enable the contractor to lay out inch-pound suspended ceiling system. As always, selection of ceiling systems and components will be based on engineering and life cycle cost considerations.

1.4.3.2 Recessed Lighting Specifications, should be edited to include both the hard metric and inch-pound values. Also, a note to the contractors should be added to advise them of their choice of either metric or inch-pound products, and the choice of substituting all suspended ceiling components.

1.4.4 Metric Illumination levels are measured in lux (lx). Provide design lighting calculations in (lx). One Foot-Candle (FC) is equal to 10.76 lx.

1.4.5 Fiber Optics. Most cables are made to metric dimensions, so these will be specified in hard metric.

1.4.6 Exterior Aerial Distribution. Materials used in Aerial Distribution, poles, crossarms and hardware associated with aerial pole distribution are unavailable in hard metric sizes. Drawing dimensions should be consistent with specification CEGS 16370, Electrical Distribution System, Aerial and all equipment should be specified as soft metric.

1.5 **Architectural Coordination**. Comply with Chapter III - "ARCHITECTURAL", paragraph l6 - "Electrical Requirements".

When criteria require provisions for the physically handicapped, follow guidance contained in Chapter III, paragraph 1.4 - "Special Instructions".

1.6 **Economics**. All designs shall be the most economical that are consistent with criteria.

1.7 **Design Analysis**.

1.7.1 Project Definitions (Air Force)and Project Engineering and Concept Submittals (Army) shall contain information as defined by Chapter XI - "DESIGN SUBMISSION REQUIREMENTS", Chapter IX - "DESIGN ANALYSIS", Part 2, Chapter 6 - "Electrical", and SWD Criteria Letter XV 1-83, with the following exception for calculations. The only calculations required are an estimate of the total connected load and resulting demand load by applying demand and diversity factors for the loads involved. Data provided shall enable the reviewing authority to get a clear picture and understanding of all work so that approval will be specific.

1.7.2 Final and Corrected Final Submittals. The design analysis, including calculations, shall be complete and contain information as defined by Chapter XI - "DESIGN SUBMISSION REQUIREMENTS", Chapter IX - "DESIGN ANALYSIS", Part 2, Chapter 6 - "Electrical", and SWD Criteria Letter XV 1-83.

1.7.3 Requirements for Medical Facility Design Submittals are defined by TM 5-838-2, DOD 4270.1-M, and MIL-HDBK-1191 for Army and MIL-HDBK-1191 for Air Force.

1.7.4 Major items of equipment shall be described with sufficient clarity to permit a definite selection from catalog data for estimating purposes.

1.8 **Drawings and Specifications**.

1.8.1 Drawings and specifications shall be coordinated by the designer with the drawings and specifications of the other disciplines to eliminate conflicts and omissions.

1.8.2 Guide specifications shall be reviewed by the designer before proceeding with the design to reduce

discrepancies between project specifications and drawings. The designer shall pay special attention to the general and technical notes in each guide specification. For any item shown on the drawings, and not described in the guide specifications, add a performance specification to the project specifications.

1.8.3 Designer shall specify by manufacturer's trade name, model, or type only when absolutely necessary. Reference Chapter VII - "SPECIFICATIONS" for guidance.

1.8.4 See Appendix A, Plate E4 and Plate E16 for typical symbols legend. List may be tailored and appended as applicable for individual projects.

2. **INTERIOR ELECTRICAL**:

2.1 **TM 5-811-2/AFM 88-9, Chapter 2** - "Electrical Design, Interior Electrical System" is general design criteria that is usually supplemented by engineering instructions for the specific job and the using agency's approved general criteria.

2.2 **Lighting Design Guide (Corps of Engineers "Engineering Instructions (EI) 16E500"),** is to be used as a design tool for lighting layouts.

2.2.1 **Standard Lighting Fixtures**, shall be used to the maximum practicable extent. A Lighting Fixture Schedule shall be provided on the drawings. Corps of Engineers Standard "Lighting Fixture Details" (formally known as Standard Drawing 40-06-04) are available from Huntsville Engineering and Support Center "Techinfo" - internet site @ http://www.hnd.usace.army.mil/techinfo/index.htm.

2.2.2 **Lighting Fixture Details,** For each luminaire shown on the lighting fixture schedule, provide a detail on the drawings and provide a description on the drawings or in the specifications, which is similar to the descriptions contained on the Corps of Engineers Standard "Lighting Fixture Details". The description shall allow at least three manufacturers to be able to supply fixtures. Alternatively, each such luminaire may be specified by description and manufacturer's reference. At least three such similar and "equal" fixtures must be available and

listed on the drawings. All lighting fixtures shall comply with the 1992 National Energy Policy Act. Fluorescent fixtures shall use high efficiency magnetic or electronic ballast.

2.2.3 **Emergency and exit lighting** shall be provided as required by NFPA 101 for the particular type of occupancy described. For Air Force projects, fixtures with wall mounted battery packs shall not be used. Fixtures with remote battery packs are permitted. Internally illuminated signs (e.g. exit signs) shall be low maintenance, low energy lighting (incandescent lighting is not permitted). If correlation between military and NFPA 101 occupancy is questionable, guidance will be requested. Where an emergency generator is provided by other criteria, the lighting shall be connected to the generator and battery power source will not be provided unless required by other criteria. The requirements of Article 700-12 of the National Electrical Code shall not be considered met solely by a connection ahead of the main disconnect. Calculations shall also be furnished to support emergency and exit lighting design.

2.3 **For Air Force projects and some Army installations**, convenience receptacles and other grounding type outlets and their branch panel feeders shall have a separate green wire provided as a grounding conductor. Verify receptacle grounding requirements with each installation. Show and note on plans. Connect to service entrance ground.

2.4 **Transient Voltage Surge Suppression (TVSS).** Requirements for TVSS will be based on an economic analysis of installed equipment and if mission critical equipment is used in the facility subjected to damage by surges.

2.4.1 In some locations, power spikes from lightning surges, utility switching operations or other sources may require the use of surge protection at the facility service.

2.4.2 Surges can also emanate form sources within the facility. In new facilities, these sources may be part of the original construction contract or user equipment installed after facility turnover. The designer must

coordinate with the User to identify these sources and then provide a design that protects the rest of the distribution system from these sources.

2.5 **Nonlinear loads**. The increasing presence of solid state switching mode power supply components in electrical equipment (Personal Computers, Electronic and High Efficiency Lighting ballast, variable speed motors), requires the designer to consider the equipment to be supplied by the distribution system and to make provisions for nonlinear loads. These loads generate harmonics which can overload conventionally-sized conductors or equipment causing safety hazards and premature failures. Typical design approaches include separation of different load types, phase balancing, over sizing of neutral conductors and buses, and the use specialized harmonic mitigating equipment such as isolation or k-rated transformers or line filters. Instrumentation and protective devices employed on circuits carrying nonlinear loads must employ true RMS sensing.

2.6 **All projects shall have an estimated voltage dip analysis performed**. A more formal calculation or analysis shall be provided if the largest motor locked rotor current equals or exceeds the full load rating of the transformer or supply conductors, or if rough analysis indicates a voltage dip greater than 5%. The calculations shall be made for both primary and any backup source(s) of power supply such as emergency generator(s).

2.7 **A dedicated space (drawn to scale) for panelboards and switchboards** shall be provided. The space shall be dimensioned on the drawings. Minimum dimensions of dedicated space shall be as required by working space requirements of the National Electrical Code except space is to extend from floor to structural ceiling. Note on the drawings that no piping, ducts, or other equipment foreign to electrical equipment shall be permitted in the space (SWDED-TM criteria letter, VI 2-65).

2.8 **Space should be available for at least three different manufacturers' standard sizes of equipment**. Clearances required for maintenance and equipment access shall be indicated by dashed lines drawn to scale on the plans. Coordinate with mechanical, architectural, and structural

disciplines regarding placement of items. The design analysis shall state the brand name and catalog number for the three different manufacturers' equipment. This is required for engine-generator sets and their controls, motor-generator sets and their controls, unit substations, main switchgear, main panelboards rated above 600 amperes, motor control centers, switches and circuit breakers mounted separately from panelboards and rated above 6OO amperes, automatic transfer switches, dry-type transformers rated above 25 KVA and uninterruptible power supplies above 15 KVA.

2.9 **Drawings shall use panel schedules** similar to Plate E2 and Plate E3, Appendix A. Circuit loads shall be shown only in volt-amperes, not watts or amperes. Load summary data and interrupting ratings of circuit breakers shall be shown.

2.10 **Show description (voltage, poles, amps) of all safety switches** and NEMA enclosure rating suitable for the environment where located. Fuse sizes and U.L. classes shall be shown when required for fusible switches.

2.11 **Any wire size larger than No. 12 AWG** shall be shown on the drawings along with the number of conductors when more than two. Conduit size shall also be shown when larger than 16mm (½ inch).

2.12 **Design shall be based on copper conductors**. The aluminum conductor option given in the guide specifications shall be allowed for the sizes permitted. Aluminum option for interior wiring system(s) shall not apply to medical facilities or certain other facilities as stated in project criteria.

2.13 **Unless conductor location is within a totally air conditioned space** the following ambient temperatures shall be used for equipment derating and conductor ampacity calculations: main mechanical equipment rooms, 50°C; outdoors (in sun), 45°C, all other locations, 40°C. These values shall also be used to determine the location of equipment whose maximum temperature rating may be exceeded by any of these temperatures.

2.14 **For panelboard feeder circuits**, apply a demand factor for load and voltage drop calculations. (Exception: when a

transformer supplies one panelboard and is adjacent to it, use the transformer rating for the panelboard feeder).

2.15 **For service entrance and service drop load and voltage drop calculations**, retain the demand factors used for feeder calculations and also apply an appropriate diversity factor.

2.16 **Available short circuit current** shall be calculated for all projects having services over 100 KVA at 480 volts or 50 KA at 208 volts. Equipment suitable for available short circuit current shall be shown and described on drawings. If accurate data is not available, assume infinite bus on the primary. Also consider motor contribution to fault current. The overcurrent devices for the Life Safety Branch, Critical Branch, and Equipment System in medical facilities shall be coordinated.

2.17 **Where ground fault protection** is required on building service, the plans and specifications shall describe the requirements and provide the setting to be used. If separate from equipment, it shall be labeled. The requirement for ground fault protection shall be indicated on the plans.

2.18 **Demand load voltage drop** shall be a maximum of 5%. It is usually apportioned 1% to service entrance and service drop, 1% to panel feeders, and 3% to branch circuits. These percentages can be varied so long as the 5% total is not exceeded.

2.19 **A riser diagram** shall be included for each system such as power, fire alarm, telecommunication, television, etc. A one-line diagram should also be provided for systems or special connections requiring additional detail or clarification (e.g., special grounding schemes, primary switching, manhole connections, etc.).

2.20 **For fire alarm systems,** a battery back-up power source will be provided. Where an emergency generator is provided by other criteria, the fire alarm system is to be connected to the emergency generator. Connection to an emergency generator will not eliminate the requirement for battery backup.

2.21 **Telecommunication requirements** will be as provided by

the communications officer at each installation. The COE Technical Manager will provide coordination with HQ USAISEC-FDEO and/or local communications officer for Army projects and the appropriate major command for Air Force projects.

2.22 **Lightning and static electricity protection**. Lightning and static electricity protection will be provided in accordance with TM 5-811-3 / AFM 88-9 Chapter 3, Electrical Design, Lightning and Static Electricity Protection. Lightning protection will be utilized where lightning damage to buildings and structures would cause large economic loss or would prevent activities essential to the Department of Defense or others. Lightning protection for Army Ordinance plant construction shall comply with Army Regulation AR 385-64, "U.S. Army Explosives Safety Program". In some cases, the facility to be constructed does not require lightning protection per the above criteria. The NFPA 780, Lightning Protection Code provides a method (guide) for risk assessment in Appendix I. The designer is not responsible for determining the economic losses to the user facility based on a lightning strike. Using this guide the designer should advise the project manager if the risk value is Moderate to Severe. In this situation the users are responsible for determining the critical nature of the facility and the need for lightning protection.

3. **EXTERIOR ELECTRICAL**:

3.1 **TM 5-811-1/AFJMAN 32-1080,** "Electrical Power Supply and Distribution" is basic design criteria. Guide Specification UFGS-l6375 covers underground distribution and Guide Specification UFGS-l6370 covers aerial distribution.

3.2 **All exterior electrical features shall be identified and sized on exterior plans**.

3.3 **Details of power poles shall be shown on drawings**. They shall include clearance between circuits, circuits and equipment, and circuits and ground.

3.4 **Short circuit computations on distribution systems** are not required unless specifically directed in instructions.

3.5 **Hot line work is not normally permitted,** but will be

verified with each installation. Any phasing of construction shall be noted on plans or submitted with plans. Any outages required shall give location of work, brief description of work, and estimated outage time. The district will have to obtain using agency approval and allow for outages in estimated construction time.

3.6 **High voltage substation grounding** shall be designed in accordance with IEEE STD. 80-1986.

3.7 **Where primary changes from aerial to underground** and pad-mounted transformers are used, provide surge arresters.

3.8 **Open-type fusible cutouts** shall be used on all 4-wire "wye" distribution systems of 7200/12470 volts and above. Voltage rating shall be suitable for system phase-to-phase voltage.

3.9 **Liquid-insulated transformers** shall be installed in accordance with, and at distances required by, MIL-HDBK-1008C and force protection criteria. Additionally, transformers shall be located at the minimum radial distances shown below from any structural openings or combustible surfaces:

Item	Distance (meter)
Non-combustible surfaces.....	1.6m
Combustible surfaces.....	3.7m
Windows, doors not used as required fire exits, louvers, and other openings.....	3.7m
Doors and other openings used as required fire exits.....	7.7m

3.10 **Liquid-insulated transformers** shall not be loaded more than 120% of rating.

3.11 **Concrete-encased duct** is required for all underground primary cables except short lengths of rigid steel conduit may be used for risers to poles and slabs of pad-mounted transformers and direct buried cable may be used for family housing projects if permitted by the installation. Warning tape shall be provided for all underground cables and

conduit.

3.12 **Reinforced concrete-encased ducts** are required under railroad tracks only.

3.13 **Profiles of invert elevations of ducts** shall be shown so that drainage will be toward manholes, and to insure that there is no conflict with existing underground utilities. Short extensions from riser poles will not require profiles.

3.14 **Where specifications allow nonmetallic conduit** for secondary conductors, the grounding conductor shall be sized and shown on the plans.

3.15 **Line poles** shall be a minimum class 4 and transformer poles a minimum of class 3.

3.16 **Details for transformer pads**, street and parking light pole bases, manholes and handholes details provided shall be used where applicable. They shall be modified when necessary to meet design requirements, such as increased wheel loads.

3.17 **When automatic circuit reclosers or relay-controlled** primary power circuit breakers are installed, the settings shall be coordinated and given in the contract.

3.18 **Strength calculations for guys and pole foundations** are required. Special strength calculations for poles, crossarms, conductors, etc., should be furnished when unusual conditions occur. Examples would be extensions or connections to aerial lines with extremely large conductors, extraordinary span length requirements, extra pole height for special clearances, etc. Calculations shall be based upon ANSI C2 and ARMY TM 5-811-1/AFJMAN 32-1080.

3.19 **Fences**, including those around electrical equipment, crossed by overhead power lines in excess of 600 volts shall be grounded in accordance with TM 5-811-3 and Guide Specification CEGS-02831 (Fence, Chain-Link).

3.20 **The electrical designer** shall coordinate with the site designer on fence locations and heights around electrical installations.

4. **SEISMIC REQUIREMENTS:** Electrical equipment located in a seismic Category C or D (See Structural Chapter IV, paragraph 23.1) shall be designed to resist lateral forces induced by earthquakes complying with TI 809-04, UFGS 13080 and 16070. Note that UFGS 16070 covers both interior and exterior electrical equipment.

5. **ENERGY CONSERVATION**: Proposals or techniques to conserve energy consumption shall be included in the design analysis. Presentation of information shall be as required by Chapter IX - "DESIGN ANALYSIS."

6. **CORROSION CONTROL**:

6.1 **General**.

6.1.1 Cathodic protection shall be provided as required by regulations. This criteria applies to any buried/submerged, ferrous metallic materials, regardless of soil or water resistivity, which are used in the construction of the following systems:

6.1.1.1 natural gas lines

6.1.1.2 water distribution and service lines

6.1.1.3 fire protection distribution and service lines

6.1.1.4 forced sanitary sewer mains and service lines

6.1.1.5 fuel lines

6.1.1.6 steam lines

6.1.1.7 chilled water lines

6.1.1.8 insulated and/or jacketed lines

6.1.1.9 all other buried metallic pressure piping

6.1.1.10 elevated water storage tanks

6.1.1.11 underground storage tanks

6.1.2 Cathodic protection is not required for some systems

under certain conditions and/or values of resistivity. See design guidance listed in subsequent paragraphs for additional information.

6.2 **Design**.

6.2.1 Calculations shall be provided for sizing system components. Locations of anodes, test stations, rectifiers, etc. shall be shown on the plans.

6.2.2 When an existing cathodic protection system will be disturbed by new construction, proper protection for existing and new shall be provided in the construction contract.

6.2.3 Insulation and/or jackets on metallic materials shall not be a substitute for cathodic protection.

6.2.4 For design guidance, use TM 5-811-7, AFM 88-45, Air Force ETL 88-5, and Corps of Engineers guide specifications.

6.2.5 See Appendix A for typical cathodic protection system details. Details should be used where applicable and modified, if necessary, to meet project specific requirements.

7. **ENGINE-GENERATORS**:

7.1 **Guide Specification** CEGS-16264 shall be used for engine-generators rated 15-300 KW. Guide Specification CEGS-16263 shall be used for engine-generators 100-2500 KW.

7.2 **Fuel and load banks** for field test are to be furnished by the construction contractor. Testing with load banks shall be done at rated power factor.

7.3 **Automatic transfer switches** are to be specified by Guide Specification UFGS-16410.

7.4 **Engine Generator Set Pad** is detailed on Plate S23, Appendix A of Chapter IV, Structural.

8. **AIRFIELD LIGHTING**:

8.1 **Guide specifications** UFGS-16525 and UFGS-16526 shall be

used for airfield lighting and navigation aids equipment.

8.2 **AFM 32-1076**, "Visual Air Navigation Systems," covers Air Force projects.

8.3 **TM 5-8ll-5**, "Army Aviation Lighting" See “TECHINFO” @ http://www.hnd.usace.army.mil/techinfo/index.htm and Standard Lighting Detail (Drawing No. 40-06-05), "Army Aviation Lighting Fixtures", design criteria for Army projects.

8.4 **When revision or improvement to an existing system** is required and instructions are not sufficiently detailed, the district should be contacted for further guidance.

9. **UTILITY MONITORING AND CONTROL SYSTEMS (UMCS)**. UMCS shall be designed in accordance with the following criteria and additional installation specific criteria furnished during the project development or definition phase. Any conflict between criteria should be reported.

9.1 **TI 811-12,** "Utility Monitoring and Control Systems“(UMCS). This manual provides design guidance for new UMCS, upgrade of existing Energy Monitoring and Control Systems (EMCS) to UMCS, and expansion of existing EMCS. This manual includes guidance for both direct digital control and supervisory control implementations of UMCS and EMCS.

9.2 **The electrical designer** shall coordinate with the mechanical designer during UMCS or EMCS design and layout and editing of guide specifications.

10. **OTHER SPECIALIZED CONSTRUCTION**:

10.1 **Army Ordinance Plant construction** shall be in accordance with army regulation AR 385-64, U.S. Army Explosives Safety Program and DA PAM 385-64, Ammunition and Explosive Safety Standards.

10.2 **For POL areas, hangars, tactical equipment shops, vehicle maintenance facilities, rocket storage, etc.**, construction shall have their respective hazardous areas defined in accordance with the National Electrical Code, and also in accordance with design instructions for specific

projects.

11. **DESIGN DEFICIENCIES**. The designer should review the "Design Review Checklist" in Appendix B for applicability to avoid design deficiencies.

12. **COMPUTER PRINTOUTS**. Printouts may be substituted for Plate E1, Lighting Calculations, that are intended to be placed in the Design Analysis. Printouts shall include all data and information required by the standard forms and must be clearly identified. Additional guidance on the use of computer programs is contained in Chapter IX - "DESIGN ANALYSIS".

APPENDIX A

Plates

Plate	Index
E1	Lighting Calculations
	Panel Schedules
E2	Single Phase Panel Computation
E3	Three Phase Panel Computation
	Exterior Electrical Details
E4	Exterior Legend
E5	Exterior Materials List (Aerial Distribution)
E5A	Exterior Materials List (Continued)
E6	Butt Wrapped Ground
E7	Ground Rod
E8	Down Guy For 27KN - 44KN (6 Kip to 10 Kip)
E9	Span Guy For 27KN - 44KN (6Kip to 10 Kip)
E10	Street Light & Pole Base
E11	Transformer Pad
E12	Concrete Encased Duct
E13	Manhole
E14	Handhole
E15	Communication Manhole
	Interior Electrical Details
E16	Interior Legend
E17	Conduit (Metric to English Conversion Table)
	Cathodic Protection Details
E18	Vertical Anode Installation
E19	Horizontal Anode Installation (Rock bottom)
E20	Horizontal Anode Installation (Backfill)
E21	Test Station - Above Ground (Galv Pipe)
E22	Test Station - Above Ground (Wood Post)
E23	Test Station - Flush Mounted
E24	Test Stations Connections
E25	Cased Roadway Crossing
E26	Test Station Wiring I
E27	Test Station Wiring II

E28	Not Used
E29	Not Used
E30	Not Used
E31	Backfill Shield
E32	Insulated Flanged Joint
E33	Insulated Pipe Couplings

LIGHTING CALCULATIONS

PROJECT: _____ DATE: _____

LOCATION: _____ BY: _____

Room Name											
Room Number											
Room Size mm											
Room Area mm^2											
Ceiling Height mm											
Fixture Height mm											
Room Cavity Ratio											
Ceiling Reflection %											
Wall Reflection %											
Coeff. of Utilization											
Maintenance Factor											
Fixture Type (see Schedule)											
Watts/Fixture											
Total Lumens Req'd (Lx)											
Lumens/Fixture (Lx)											
Fixtures Req'd/Provided											
Lux Provided											
Lux Req'd											

Notes:

PANEL COMPUTATION

CIRCUIT BREAKER INTERRUPTING RATING_____ AMPS.

PANEL _____ VOLTS_____ 1 PHASE WIRES ____ MCB MLO _____ A.

CKT. NO.	TRIP AMPS	NO. POLES	LOAD SERVED	PHASE LOAD V.A. A	PHASE LOAD V.A. B	LOAD SERVED	CKT. NO.	TRIP AMPS	NO. POLES
1							2		
3							4		
5							6		
7							8		
9							10		
11							12		
13							14		
15							16		
17							18		
19							20		
21							22		
23							24		
25							26		
27							28		
29							30		
31							32		
33							34		
35							36		
37							38		
39							40		
41							42		
			TOTAL		------				

TOTAL CONNECTED LOAD_____ KVA

ESTIMATED DEMAND LOAD_____ KVA

DEMAND LINE AMPS_____

PLATE E2

PANEL COMPUTATION

CIRCUIT BREAKER INTERRUPTING RATING_____ AMPS.

PANEL _____ VOLTS_____ 3 PHASE WIRES ____ MCB MLO _____ Amps.

CKT. NO.	TRIP AMPS	NO. POLES	LOAD SERVED	PHASE LOAD V.A. A	B	C	LOAD SERVED	CKT. NO.	TRIP AMPS	NO. POLES
1								2		
3								4		
5								6		
7								8		
9								10		
11								12		
13								14		
15								16		
17								18		
19								20		
21								22		
23								24		
25								26		
27								28		
29								30		
31								32		
33								34		
35								36		
37								38		
39								40		
41								42		
			TOTAL							

TOTAL CONNECTED LOAD_____ KVA

ESTIMATED DEMAND LOAD_____ KVA

DEMAND LINE AMPS _____

PLATE E3

ELECTRICAL EXTERIOR LEGEND

SYMBOL			DESCRIPTION
NEW	EXISTING TO REMAIN	EXISTING TO BE REMOVED	
—E—	—E_X—	—×— E_X —×—	AERIAL PRIMARY. 7620/13200 VOLTS, 3ϕ.
	—$E1_X$—		AERIAL PRIMARY. 7620 VOLT, 1ϕ.
	—‖—E_X—	—×—×E_X×—×—	AERIAL SECONDARY. NO. OF CROSS LINES INDICATE NO. OF CONDUCTORS. NO. CROSS LINES INDICATES TWO CONDUCTORS.
	—‖—N_X—		NEUTRAL SUPPORTED AERIAL SECONDARY.
	—‖—SL_X—		AERIAL STREETLIGHT CIRCUIT. CROSS LINES SAME AS ABOVE.
	—‖—T_X—		AERIAL TELEPHONE CABLE. CROSS LINES SAME AS ABOVE.
—E^{UG}—	—E_X^{UG}—	—×— E_X^{UG} —×—	UNDERGROUND PRIMARY. 7620/13200 VOLTS, 3ϕ
--$E1^{UG}$-	—$E1_X^{UG}$—		UNDERGROUND PRIMARY. 7620 VOLTS, 1ϕ
	—‖—E_X^{UG}—		UNDERGROUND SECONDARY.
	—E_X—		EXIST. AERIAL PRIMARY LINE TO BE CONVERTED TO VERT. CONFIG.
—SG^{6M}	—SG_X—	—×— SG_X —×—	SPANGUY WITH QUANTITY & STRENGTH INDICATED.
—|6M	—→	—×—×→	DOWNGUY WITH STRENGTH INDICATED.
●	○	⊗	POLE
◒		◒	EXISTING POLE TO BE REPLACED WITH NEW POLE.
	△50		POLE MOUNTED TRANSFORMER. NO. INDICATES KVA RATING.
	○—		STREETLIGHT LUMINAIRE AND BRACKET.
	—T_X^{UG}—		UNDERGROUND TELEPHONE.
—╳—		—╳— X	POLE TOP SWITCH. NORMALLY CLOSED.
—/ /		—/ / X	POLE TOP SWITCH. NORMALLY OPEN.
■E	□E		MANHOLE. "E" INDICATES ELECTRICAL. "C" INDICATES COMMO.
A●—■	○—□		STREETLIGHT OR PARKING AREA LIGHT POLE. NO. OF LUMINAIRES AS SHOWN. "A" INDICATES TYPE IN SCHEDULE.
	▱	R▱	FLOODLIGHT
1 A / 13.7 3			POLE IDENTIFICATION SYMBOL. "1" INDICATES POLE NO. "A" INDICATES POLE DETAIL REFERENCE. "13.7" INDICATES POLE HEIGHT IN METERS. "3" INDICATES POLE CLASS. 13.7 METERS CORRESPONDS TO 45 FEET.
⬡			KEYED NOTE REFERENCE.
	⊥300 KVAR		CAPACITOR BANK WITH KVAR RATING INDICATED.
▲IX	△225		PAD MOUNT TRANSFORMER - 3ϕ. NO. INDICATES KVA RATING. ROMAN NUMERAL INDICATES TYPE IN SCHEDULE.
[1]	[1]	[1]	LINETYPE IDENTIFICATION. NO. INDICATES TYPE IN SCHEDULE.
D—●			FLOODLIGHT POLE. LETTER INDICATES TYPE IN LUMINAIRE SCHEDULE.
[S]			PAD MOUNTED PRIMARY SWITCH.
◪			PULLBOX.
		⟐F	FIRE ALARM STATION PULLBOX
		⟐R	CATHODIC PROTECTION RECTIFIER.
②			CONCRETE ENCASED DUCT BANK W/ NO. OF DUCTS INDICATED. DUCTS TO BE 129 mm UNLESS OTHERWISE INDICATED.

MATERIAL LIST

ITEM	DESCRIPTION *
A	CROSSARM, 89mm X 114mm X 2.4m (3-1/2" X 4-1/2" X 8'-0")
B	CROSSARM BRACE, ANGLE
C	CROSSARM PIN, STEEL
D	PIN INSULATOR, TOP TIE
E	MACHINE BOLT, 15.9mm (5/8 ") X REQUIRED LENGTH, WITH NUT.
F	WASHER, 57.2mm X 57.2mm X 4.8mm (2-1/4" X 2-1/4" X 3/16"), WITH 17.5mm (11/16") HOLE.
G	CARRIAGE BOLT, 9.5mm X 130mm (3/8" X 5")
H	
I	DOUBLE ARMING BOLT
J	SUSPENSION INSULATOR
K	SECONDARY RACK
L	SURGE ARRESTER, 3KV., 9KV., 10KV.
M	PRIMARY FUSE CUTOUT 15KV
N	SECONDARY SPOOL CLEVIS AND INSULATOR
O	STRAIN PLATE
P	GUY HOOK
Q	GUY CLAMP
R	STRAIN INSULATOR
S	GUY STRAND
T	GUY WIRE GUARD, 1.994 mm (14 GAUGE) STEEL
U	ANCHOR ROD, 19mm X 2.4m (3/4 " X 8'-0") MINIMUM DIMENSIONS
V	ANCHOR
W	GROUND WIRE
X	GROUND WIRE MOULDING, SCHEDULE 80 SUNLIGHT RESISTANT PVC
Y	GROUND ROD
Z	FIBERGLASS CROSSARM, .9m (36"), 75mm (3") DIA., SOLID.

* NOTE: POUND-INCH MEASURE ARE IN PARENTHESES.

MATERIAL LIST

ITEM	DESCRIPTION *
AA	DEADEND CLAMP
BB	TRANSFORMER BRACKET AND INSULATOR
CC	DEADEND ASSEMBLY WITH 89mm X 140mm X 2.4m (3-1/2" X 5-1/2" X 8'-0") CROSSARM HUGHES CATALOG NUMBER 2890B OR EQUAL
DD	CONDUIT WEATHERHEAD
EE	CONDUIT
FF	SOLDERLESS CONNECTOR
GG	HOTLINE CLAMP
HH	STIRRUP
II	
JJ	POLE TOP PIN, 500mm (20")
KK	MACHINE BOLT, 12.7mm (1/2 ") X REQUIRED LENGTH
LL	WASHER, 50.8mm X 50.8mm X 3.2mm WITH 15mm HOLE (2" X 2" X 1/8" WITH 9/16" HOLE)
MM	CABLE TERMINATOR
NN	STRAIGHT LINE STRAIN CLAMP
OO	EYEBOLT, 16mm (5/8") X REQUIRED LENGTH
PP	EYENUT, 16mm (5/8")
QQ	PIPESTRAP
RR	WOOD CROSSARM BRACE, 49.2mm X 74.6mm X REUIRED LENGTH (1-15/16" X 2-15/16" X REQUIRED LENGTH)
SS	WASHER, ROUND, 35mm (1-3/8") DIAMETER X 3.2mm (1/8") WITH 15mm (9/16") HOLE
TT	ANGLE CLAMP
UU	SERVICE CABLE DEADEND, CLEVIS TYPE
VV	POLE BAND, ADJUSTABLE
WW	GROUNDING BUSHING
XX	CONNECTING LINK
YY	STRAIN INSULATOR, 2m (78") FIBERGLASS, CLEVIS AND ROLLER FITTINGS
ZZ	EQUIPMENT SUPPORT BRACKET, STEEL

* NOTE: POUND-INCH MEASURE ARE IN PARENTHESES.

MATERIAL LIST

ITEM	DESCRIPTION
A	CROSSARM, 3-1/2" X 4-1/2" X 8'-0"
B	CROSSARM BRACE, ANGLE
C	CROSSARM PIN, STEEL
D	PIN INSULATOR, TOP TIE
E	MACHINE BOLT, 5/8" X REQUIRED LENGTH, WITH NUT.
F	WASHER, 2-1/4" X 2-1/4" X 3/16", WITH 11/16" HOLE.
G	CARRIAGE BOLT, 3/8" X 5"
H	
I	DOUBLE ARMING BOLT
J	SUSPENSION INSULATOR
K	SECONDARY RACK
L	SURGE ARRESTER, 3KV., 9KV., 10KV.
M	PRIMARY FUSE CUTOUT
N	SECONDARY SPOOL CLEVIS AND INSULATOR
O	STRAIN PLATE
P	GUY HOOK
Q	GUY CLAMP
R	STRAIN INSULATOR
S	GUY STRAND
T	GUY WIRE GUARD, 14 GAUGE STEEL
U	ANCHOR ROD, 3/4" X 8'-0" MINIMUM DIMENSIONS
V	ANCHOR
W	GROUND WIRE
X	GROUND WIRE MOULDING, 1-1/4"
Y	GROUND ROD
Z	
AA	DEADEND CLAMP
BB	TRANSFORMER BRACKET AND INSULATOR
CC	DEADEND ASSEMBLY WITH 87.5 X 137.5 X 2400 (3-1/2" X 5-1/2" X 8'-0") CROSSARM HUGHES CATALOG NUMBER 2890B OR EQUAL
DD	CONDUIT WEATHERHEAD
EE	CONDUIT
FF	SOLDERLESS CONNECTOR
GG	HOTLINE CLAMP
HH	STIRRUP
II	
JJ	POLE TOP PIN, 20"
KK	MACHINE BOLT, 1/2" X REQUIRED LENGTH
LL	WASHER, 2" X 2" X 1/8" WITH 9/16" HOLE
MM	CABLE TERMINATOR
NN	STRAIGHT LINE STRAIN CLAMP
OO	EYEBOLT, 5/8" X REQUIRED LENGTH
PP	EYENUT, 5/8"
QQ	PIPESTRAP
RR	WOOD CROSSARM BRACE, 1-15/16" X 2-15/16" X REQUIRED LENGTH
SS	WASHER, ROUND, 1-3/8" DIAMETER X 7/64" WITH 9/16" HOLE
TT	ANGLE CLAMP
UU	SERVICE CABLE DEADEND, CLEVIS TYPE
VV	POLE BAND, ADJUSTABLE
WW	GROUNDING BUSHING
XX	CONNECTING LINK
YY	STRAIN INSULATOR, 78" FIBERGLASS, CLEVIS AND ROLLER FITTINGS
ZZ	EQUIPMENT SUPPORT BRACKET, STEEL

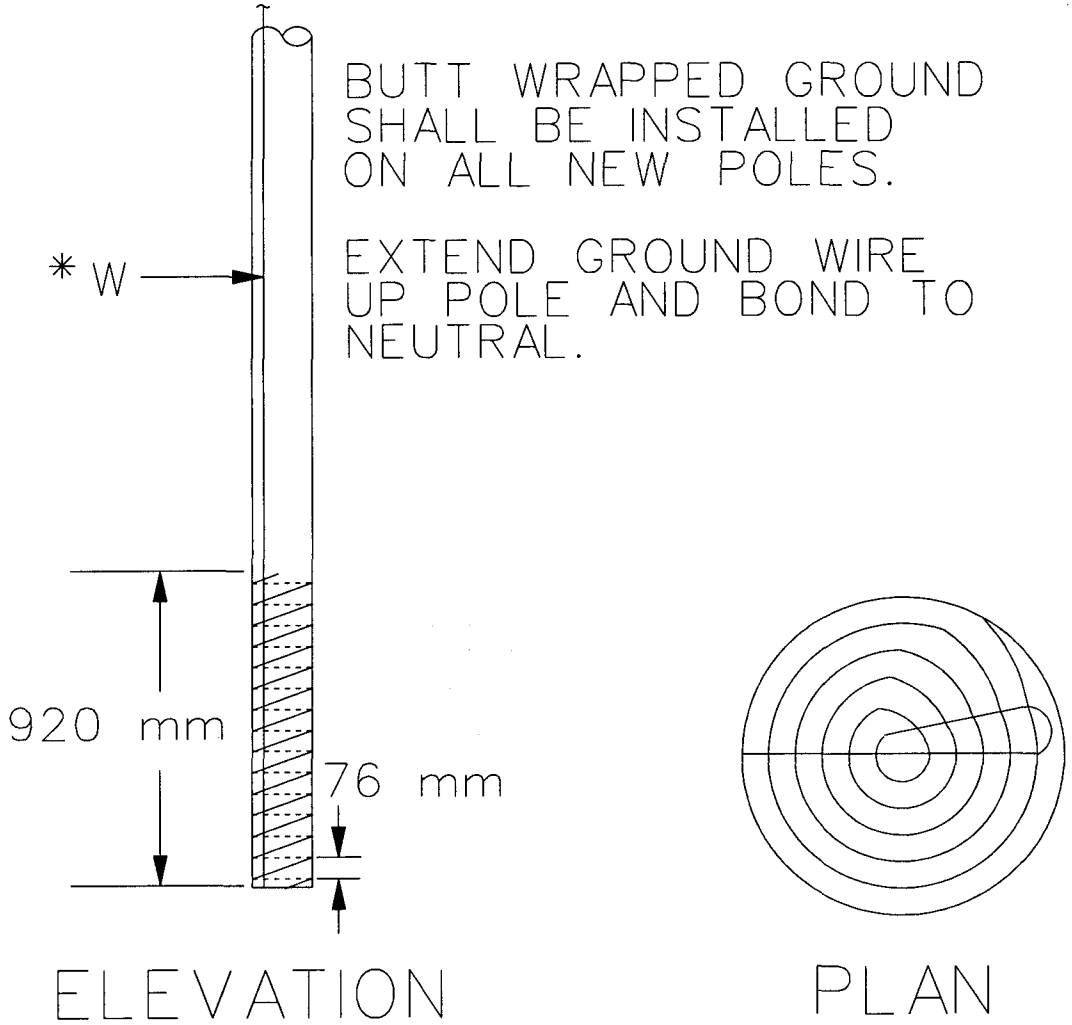

BUTT WRAPPED GROUND

N.T.S.

* NOTE: MATERIALS INDICATED ARE REFERENCED TO PLATE E5.

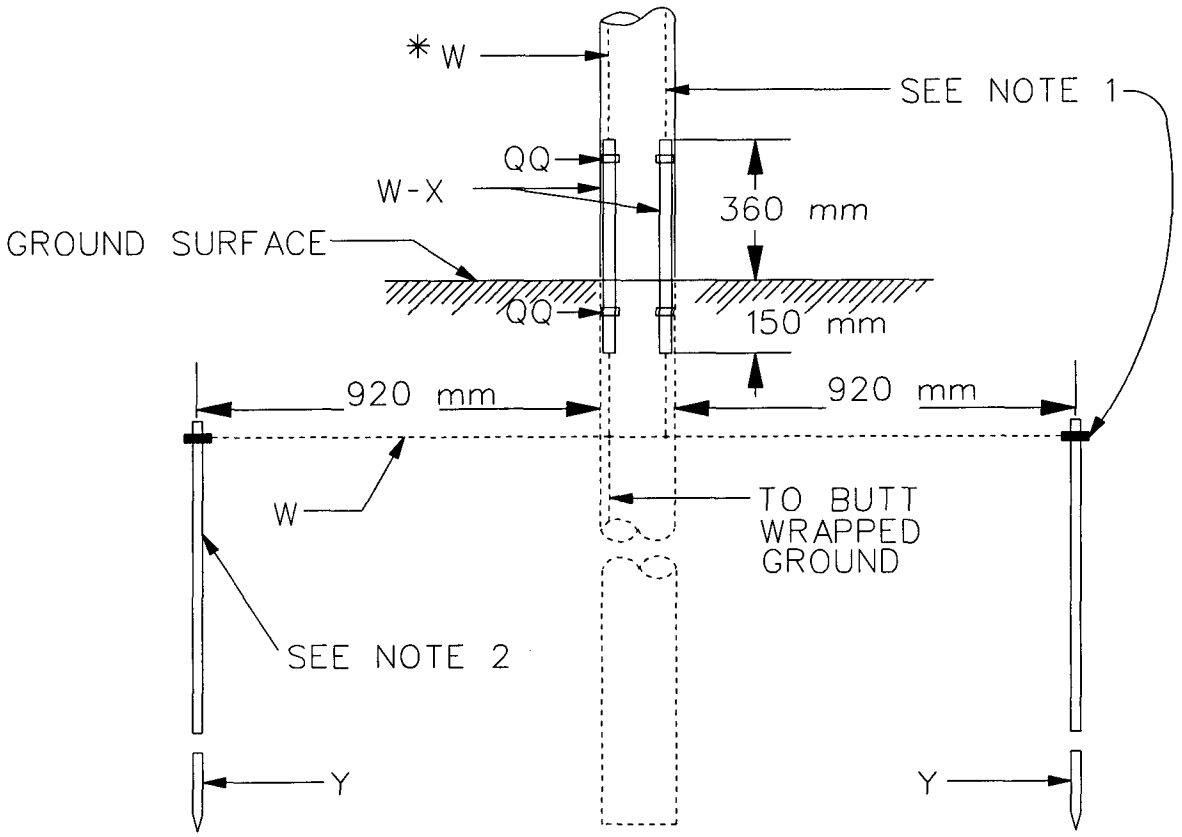

GROUND ROD DETAIL

N.T.S.

NOTES :

1: INSTALL ADDITIONAL GROUND ROD AND GROUND WIRE WHERE SECONDARY GROUND IS INDICATED ON POLE DETAIL.

2: INSTALL GROUND ROD FOR THE FOLLOWING POLES:

PROVIDE GROUND ROD FOR SURGE ARRESTOR INSTALLATIONS OR WHEN REQUIRED BY NESC

* NOTE: MATERIALS INDICATED ARE REFERENCED TO PLATE E5.

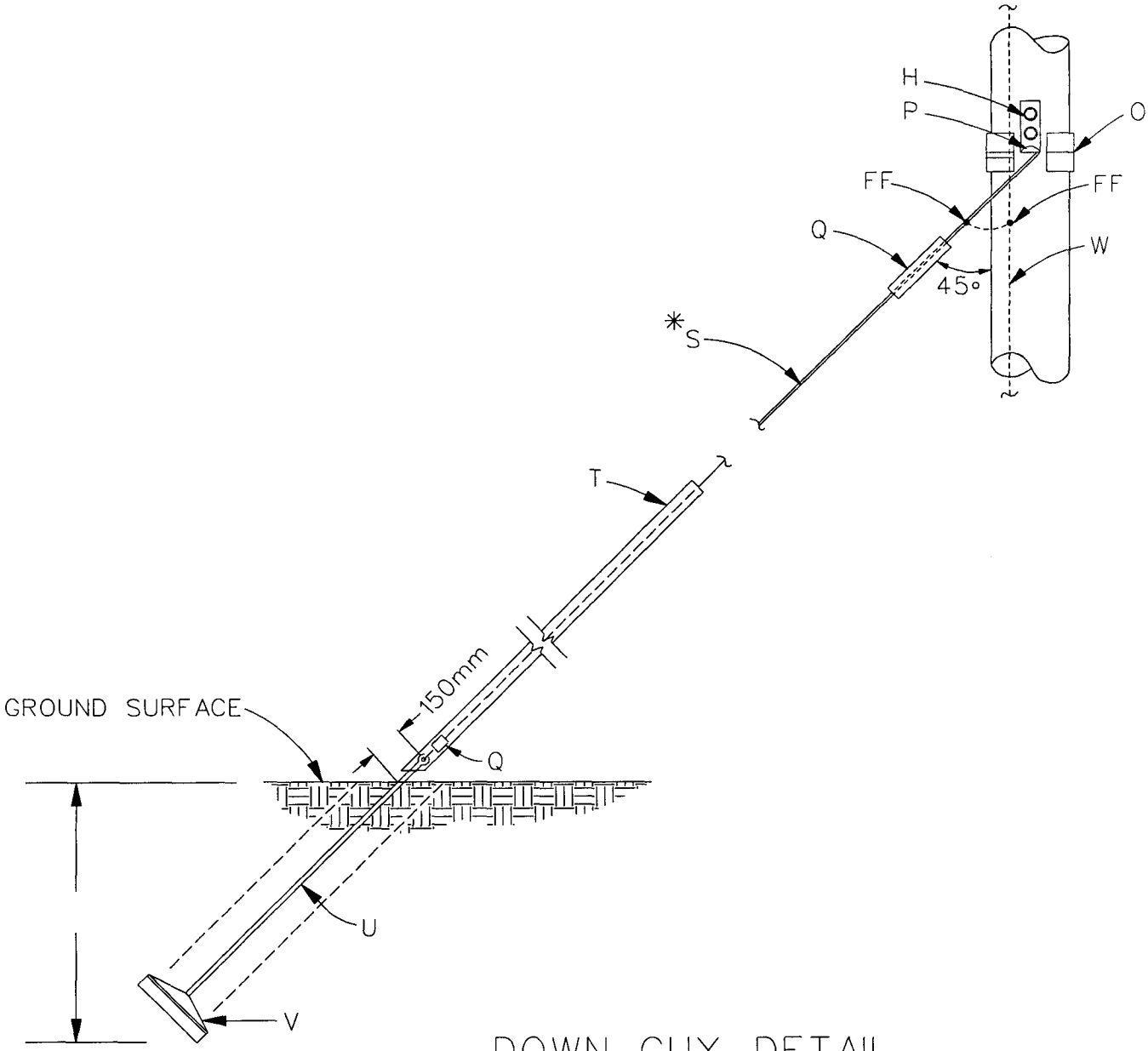

DOWN GUY DETAIL

N.T.S.

FOR 27KN-44KN GUYS

(6,000 - 10,000 Pounds)

* NOTE: MATERIALS INDICATED ARE REFERENCED TO PLATES E5 AND E5A.

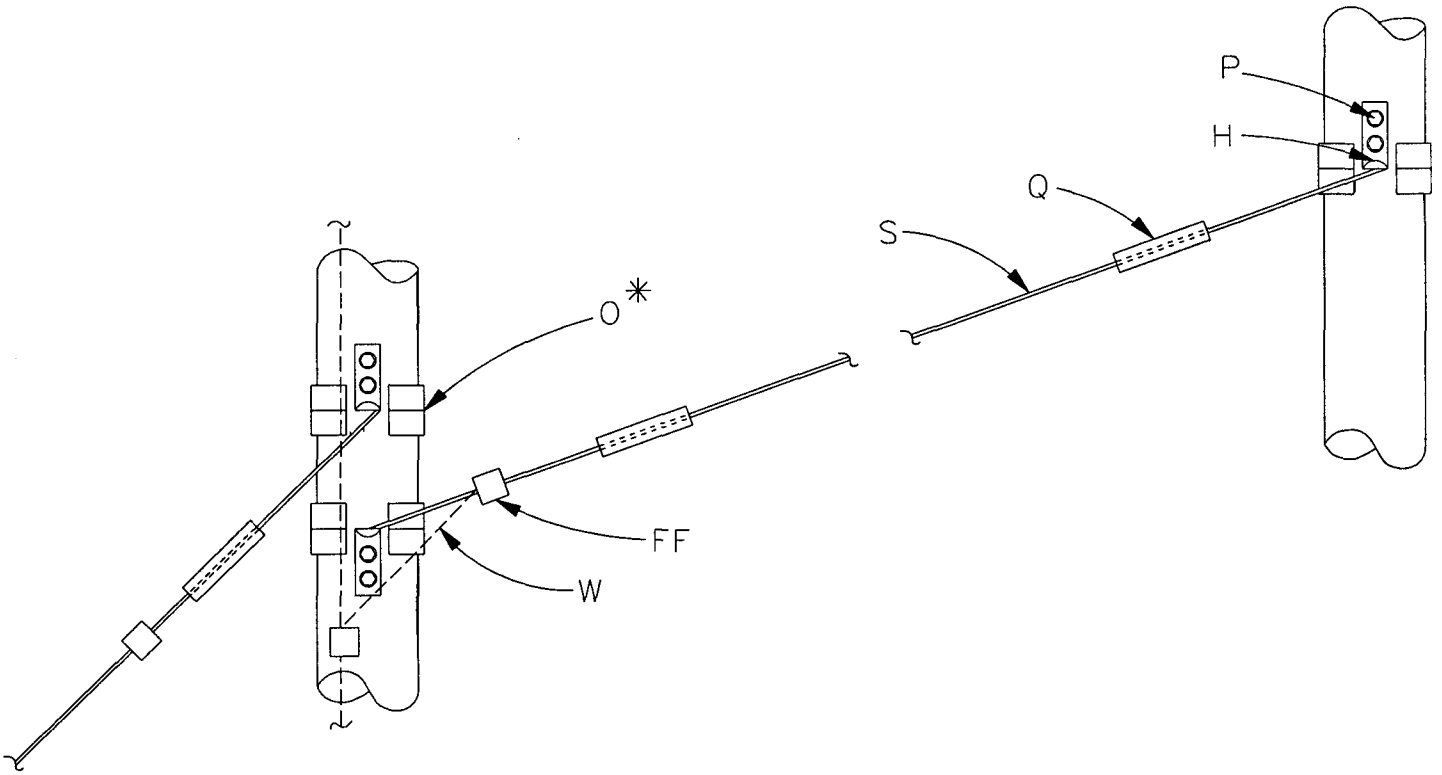

SPAN GUY

N.T.S.

FOR 27KN-44KN GUYS

*NOTE: MATERIALS INDICATED ARE REFERENCED TO PLATES E5 AND 5A.

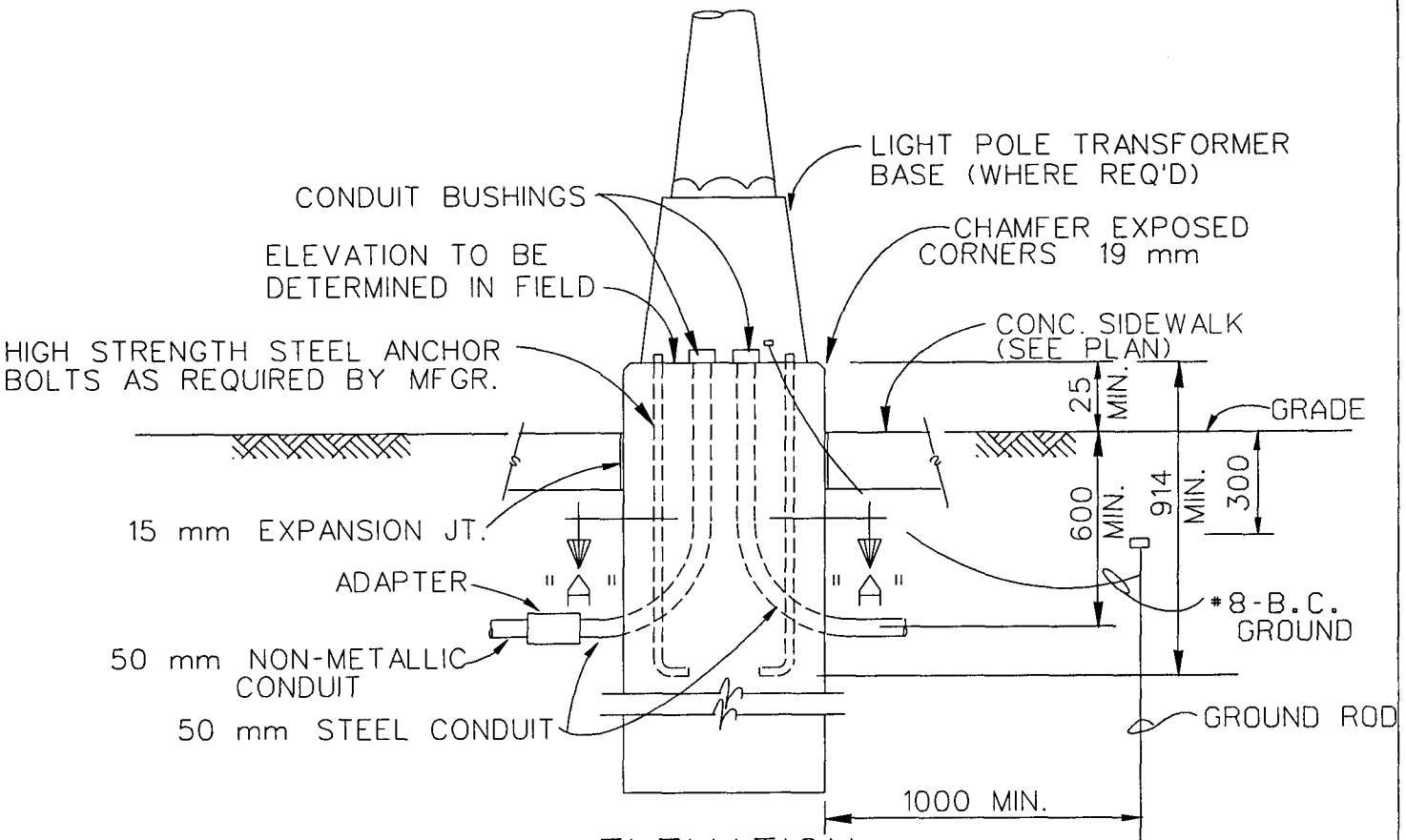

ELEVATION

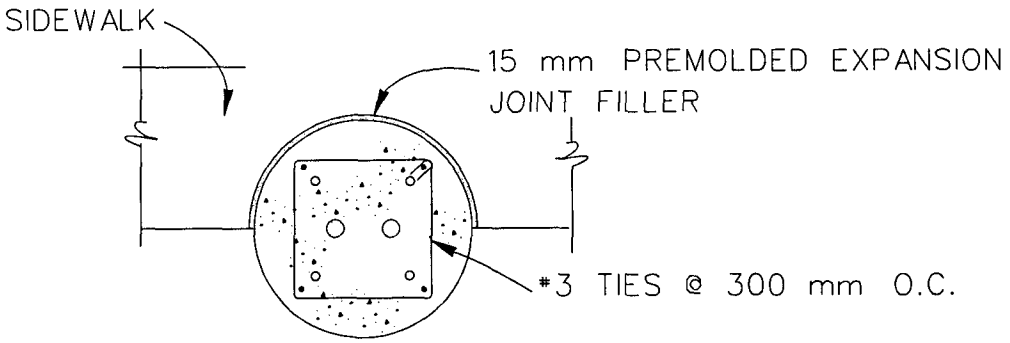

SECTION "A-A"

	PIER*		
POLE HEIGHT	DIAMETER	DEPTH BELOW FINISHED GRADE	REINFORCING
≤ 6 m	450 mm	1.5 m	4 - #6
9 m	600 mm	2.0 m	4 - #7

NOTE: *THESE ARE MINIMUM REQUIREMENTS TO BE VERIFIED BY THE STRUCTURAL ENGINEER TO SUIT SPECIFIC SITE CRITERIAL. ENGINEER SHALL DESIGN PIER FOR POLE HEIGHT > 9 m.

STREET LIGHT POLE BASE

NOT TO SCALE

PLATE E10

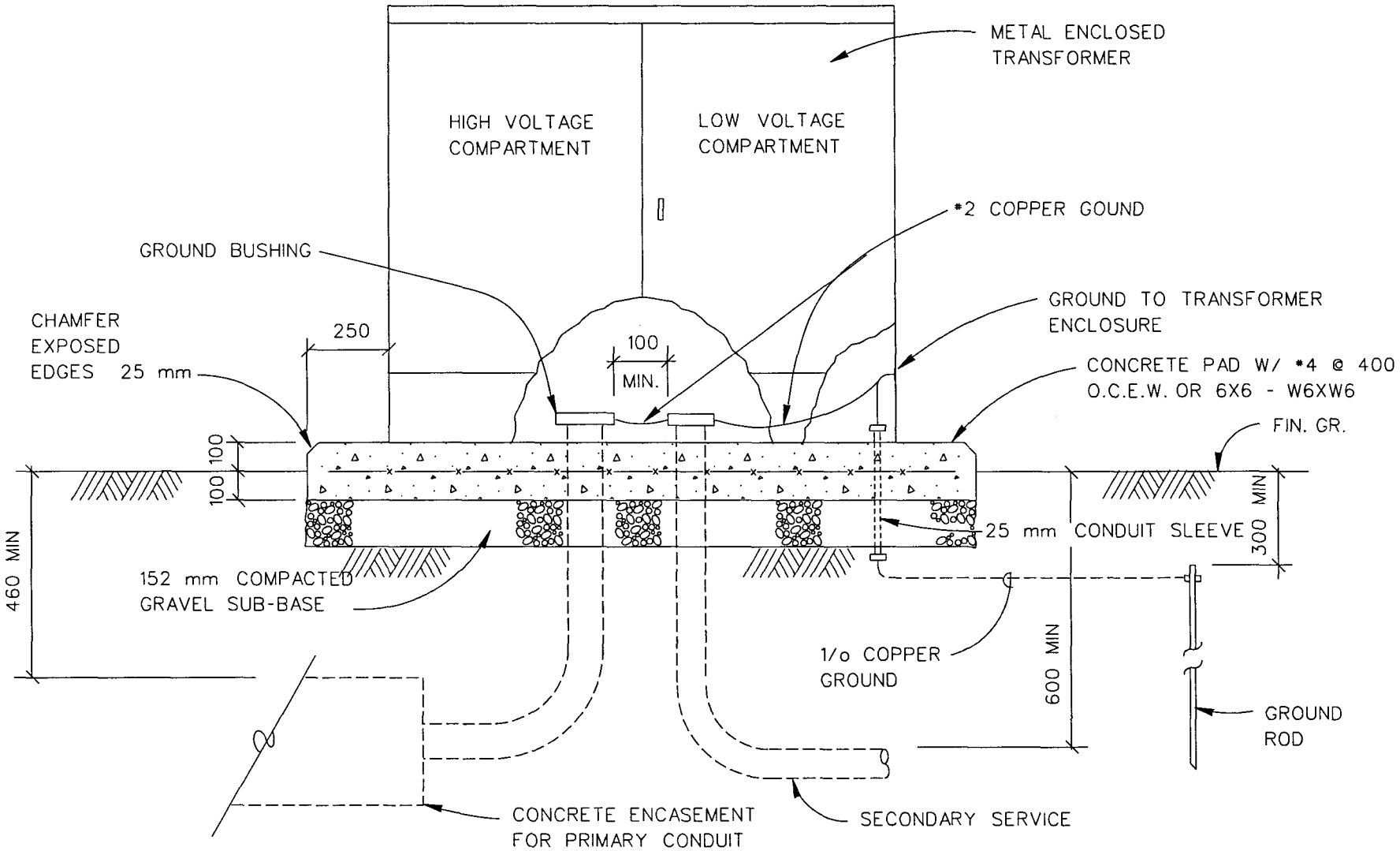

TRANSFORMER PAD DETAIL

N.T.S.

PLATE E11

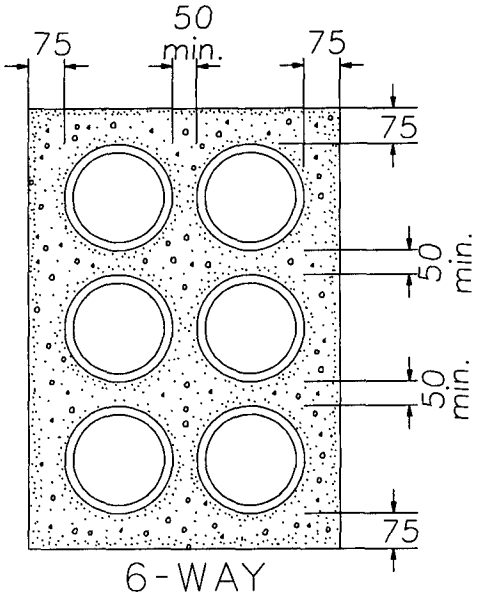

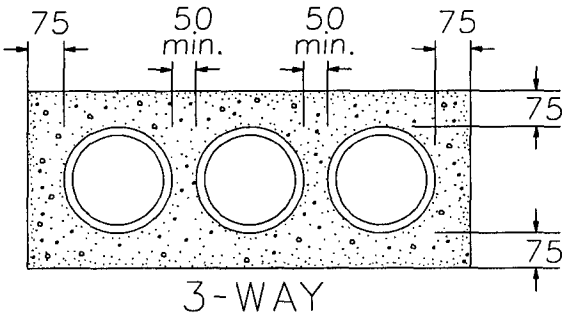

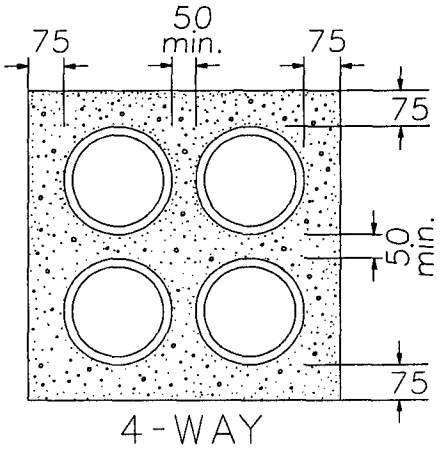

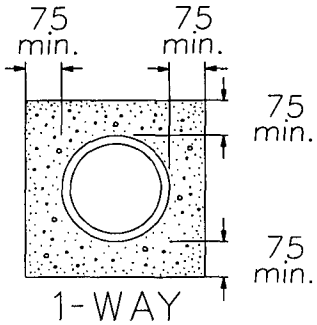

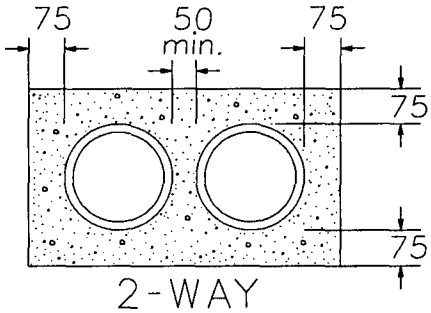

NOTE: 100mm. OF CONCRETE SHALL BE PROVIDED BETWEEN ADJACENT ELECTRIC POWER AND COMMUNICATION DUCTS.

CONCRETE ENCASED DUCT DETAILS

N.T.S.

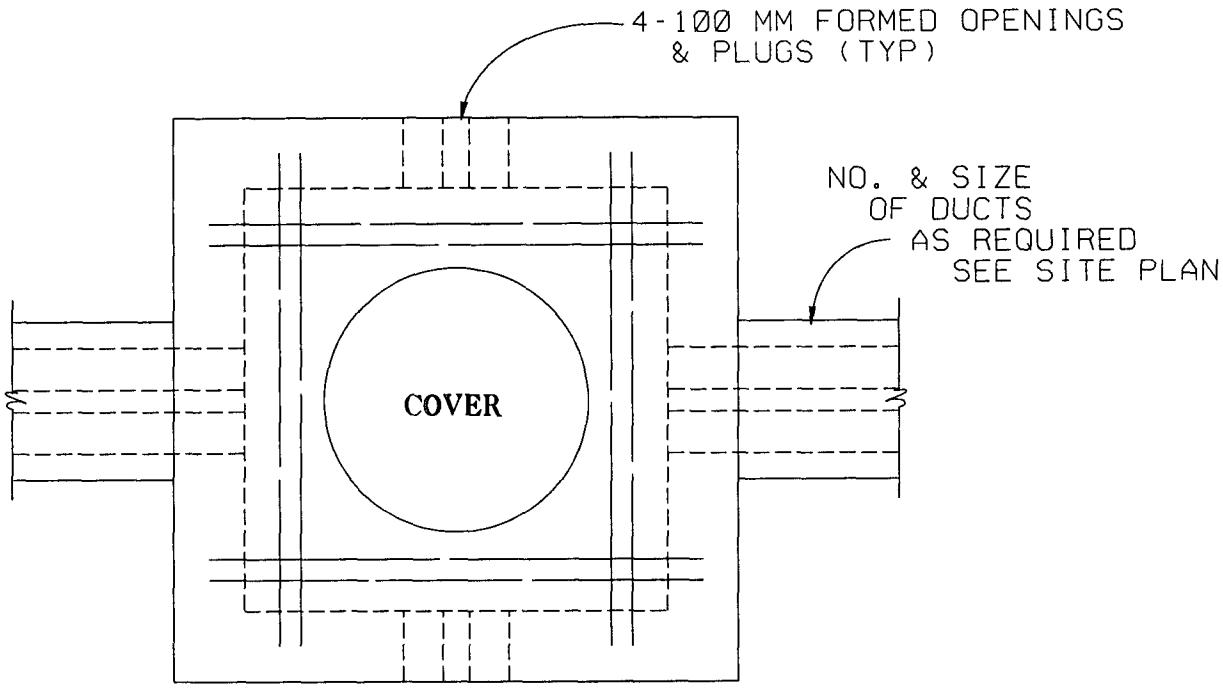

PLAN

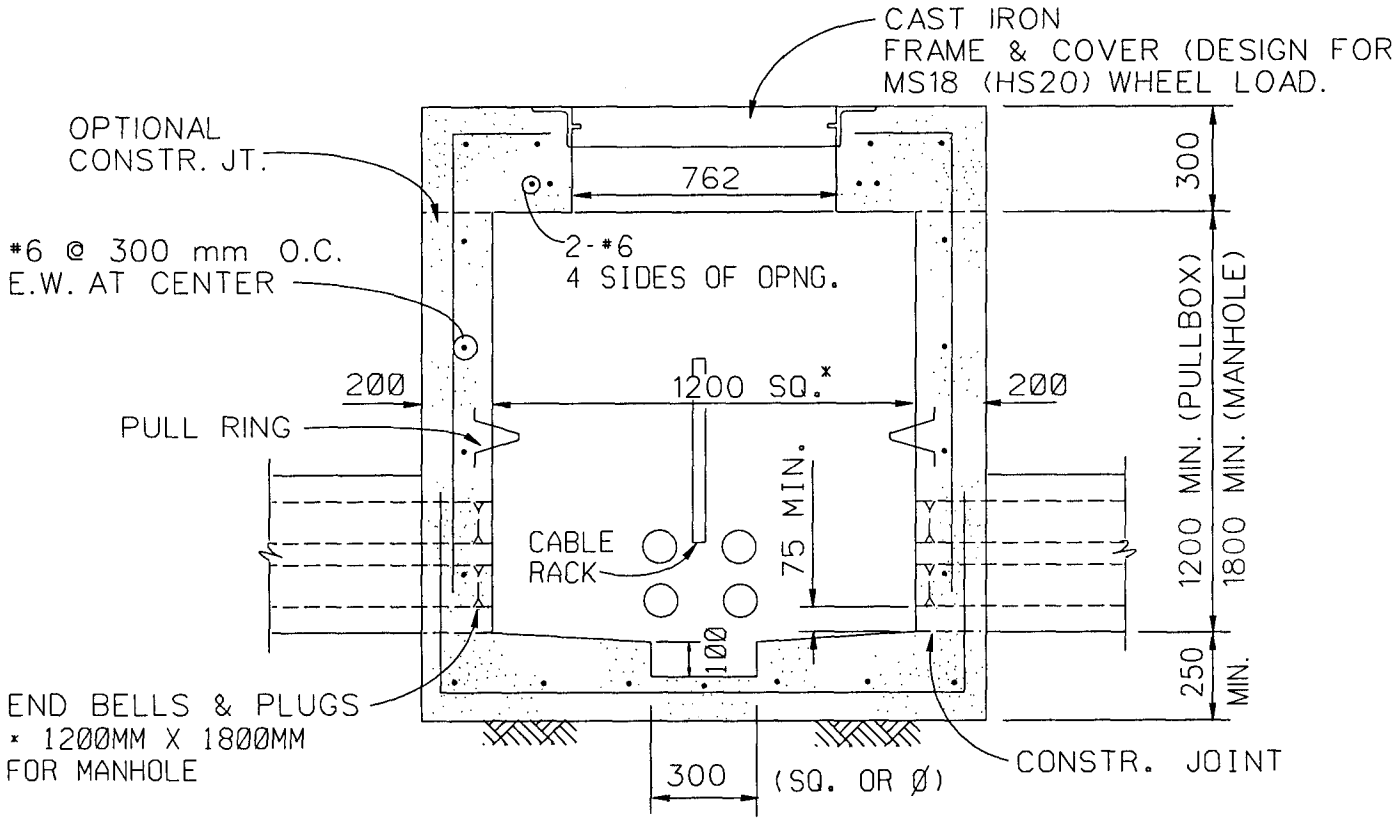

SECTION

ELECTRICAL PULLBOX & MANHOLE DETAILS

N.T.S. (MS18 (HS20) WHEEL LOAD)

ANY DEVIATION FROM THE MINIMUM DIMENSIONS OR DEPTH SHOWN WILL REQUIRE A NEW STRUCTURAL DESIGN

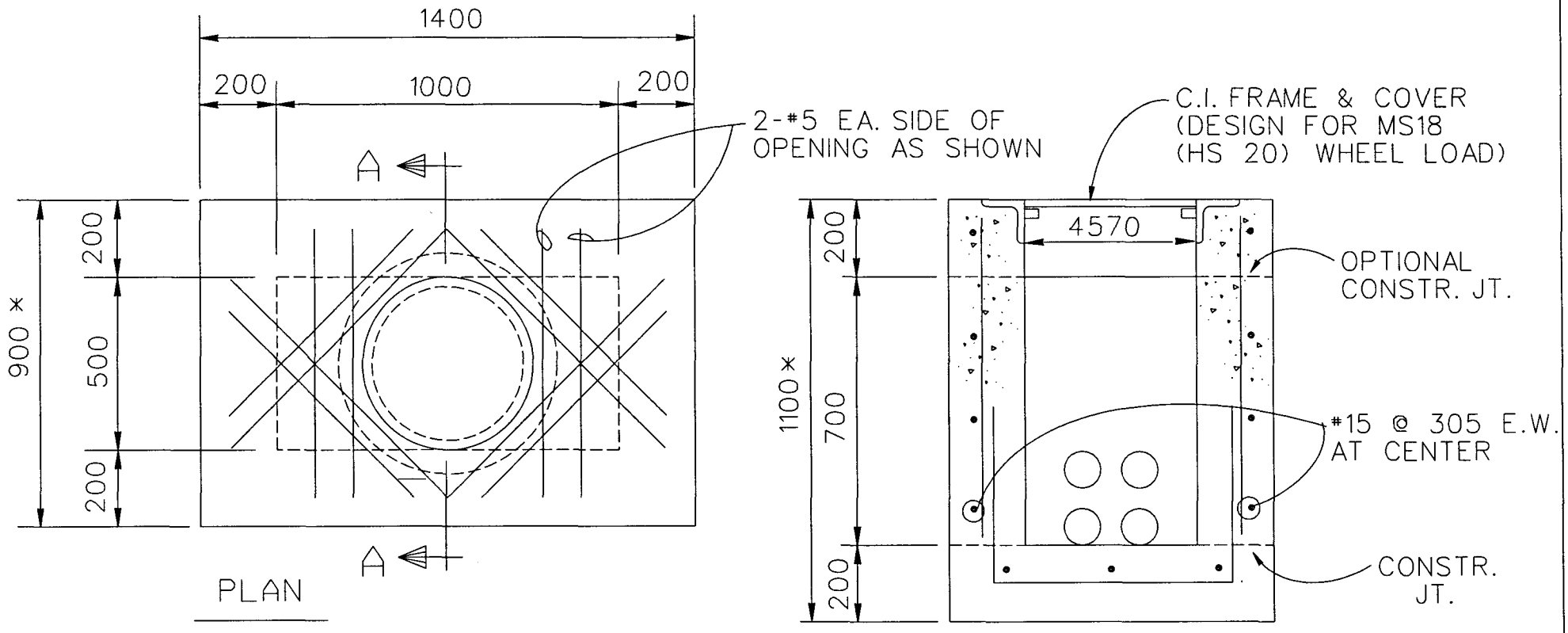

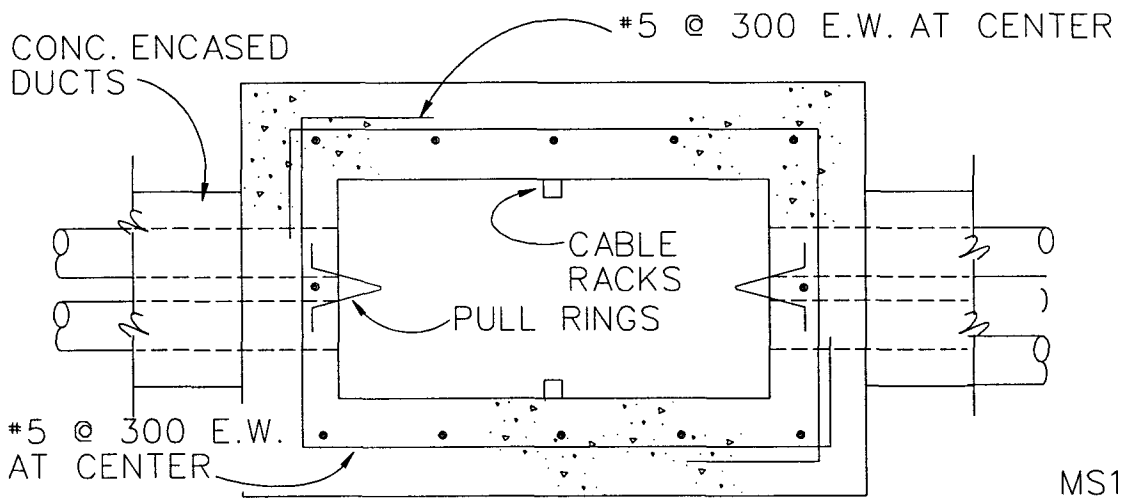

NOTE TO A-E:

SEE CEGS 16402

ELECTRICAL HANDHOLE DETAILS (FOR CIRCUITS @ 600 VOLTS, OR LESS)

N.T.S.

MS18 (H20) WHEEL LOAD

* ANY DEVIATION FROM THE PLAN DIMENSIONS OR DEPTH SHOWN WILL REQUIRE A NEW STRUCTURAL DESIGN

PLATE E14

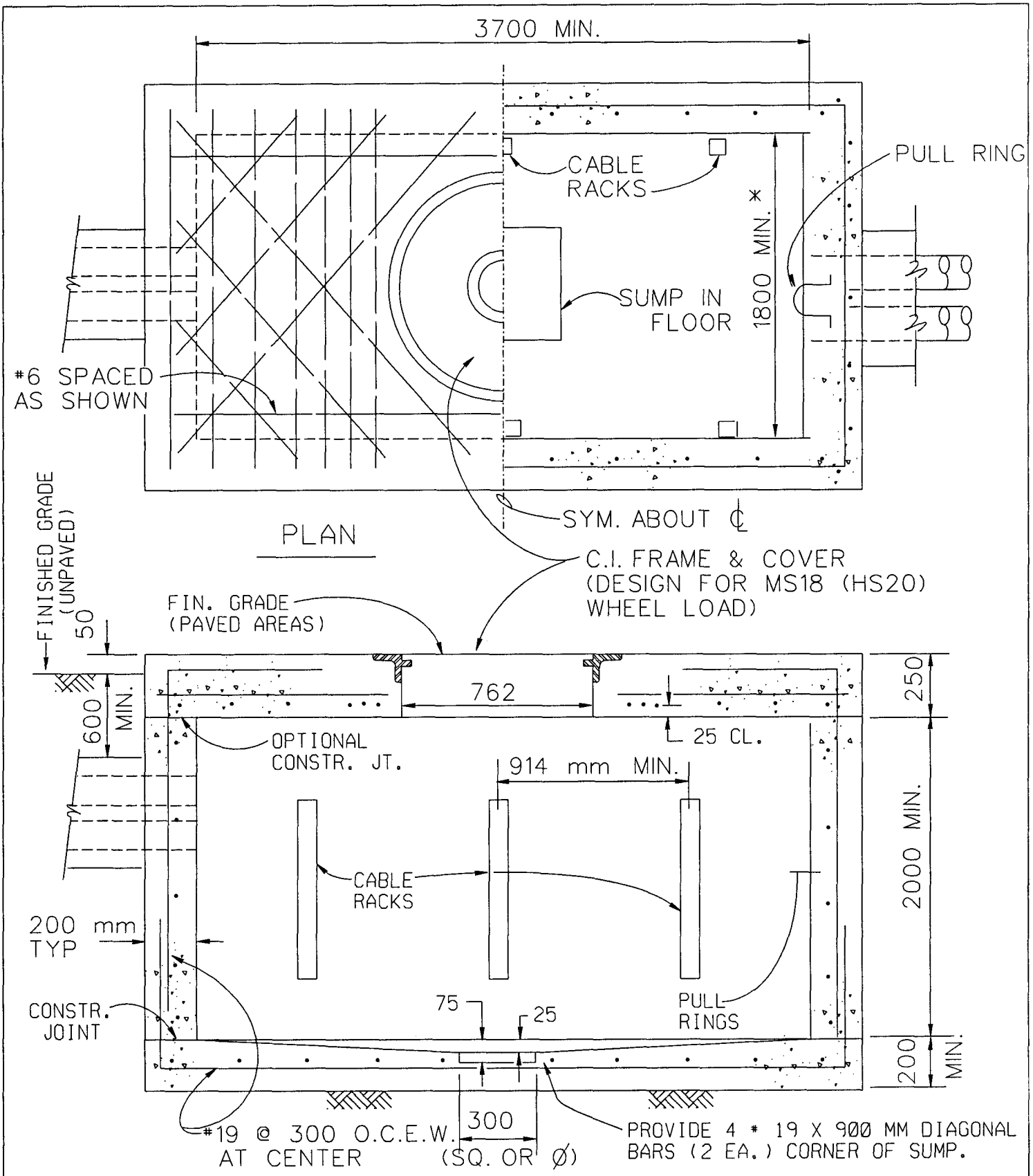

NOTE TO A-E: SEE UFGS 16402.

COMMUNICATIONS MANHOLE

SECTION

N.T.S. (MS18 (HS 20) WHEEL LOAD)

ELECTRICAL INTERIOR LEGEND

SYMBOL	DESCRIPTION
A,b	FLUORESCENT LIGHT FIXTURE. CAPITAL LETTER DENOTES TYPE IN FIXTURE SCHEDULE. SMALL LETTER DENOTES SWITCH W/ SAME LETTER OPERATES THIS FIXTURE. CIRCLE IS OUTLET BOX.
B,c	WALL MOUNTED FLUORESCENT LIGHT FIXTURE. LETTERS SAME AS ABOVE. CIRCLE IS OUTLET BOX.
C,d	INCANDESCENT OR H.I.D. LIGHT FIXTURE. LETTERS SAME AS ABOVE.
D,e	WALL MOUNTED INCANDESCENT OR H.I.D. LIGHT FIXTURE. LETTERS SAME AS ABOVE.
WP	DUPLEX RECEPTACLE. 15A./125V. GROUNDED TYPE MOUNTED 450mm ABOVE FLOOR UNLESS OTHERWISE NOTED. "WP" INDICATES WEATHERPROOF. "GF" INDICATES GROUND FAULT INTERRUPTER. "EP" INDICATES EXPLOSION PROOF.
B	SPECIAL PURPOSE RECEPTACLE.
$a	SINGLE POLE WALL SWITCH. MOUNT 1.2m ABOVE FLOOR. SMALL LETTER DENOTES SWITCH OPERATES FIXTURE HAVING SAME LETTER.
$ $4	SAME AS SWITCH ABOVE W/ THE FOLLOWING EXCEPTIONS: 3 DENOTES 3-WAY, 4 DENOTES 4-WAY SWITCH.
5	MOTOR. NUMERAL INDICATES kW.
	MOTOR CONTROLLER.
R	SAFETY OR DISCONNECT SWITCH, UNFUSED UNLESS OTHERWISE NOTED. "R" INDICATES RAINTIGHT.
	PANELBOARD.
	CONDUIT & CONDUCTORS. NUMBER OF CROSSLINES INDICATES NUMBER OF CONDUCTORS. NO CROSSLINES INDICATES 2 CONDUCTORS.
A-1,3	BRANCH CIRCUIT HOMERUN TO PANELBOARD W/ CIRCUIT NUMBERS SHOWN. NO. OF ARROWS INDICATES NUMBER OF CIRCUITS.
J	JUNCTION BOX.
	TELEPHONE OUTLET. MOUNT 450mm ABOVE FLOOR.
TV	TV OUTLET. MOUNT 450mm ABOVE FLOOR.
F	FIRE ALARM MANUAL STATION. MOUNT 1.2m ABOVE FLOOR.
	FIRE ALARM BELL. MOUNT 2.4m ABOVE FLOOR OR WITHIN SPACE OF 150mm BELOW CEILING, WHICHEVER IS LOWER.
	COMBINATION FIRE ALARM VISUAL/AUDIBLE INDICATOR. WALL MOUNT 2030mm ABOVE FINISHED FLOOR OR 152mm BELOW CEILING, WHICHEVER IS LOWER.
V	FIRE ALARM VISUAL INDICATOR. WALL MOUNT 2030mm ABOVE FINISHED FLOOR OR 152mm BELOW CEILING, WHICHEVER IS LOWER.
A	EXIT LIGHT. CEILING MOUNTED. LETTER DENOTES TYPE IN FIXTURE SCHEDULE. PROVIDE DIRECTIONAL ARROWS WHERE INDICATED.
B	WALL MOUNTED EXIT LIGHT. LETTER & DIRECTIONAL ARROW SAME AS ABOVE.
C	BATTERY POWERED EMERGENCY LIGHT SET. TRIANGLES INDICATE NUMBER OF HEADS & DIRECTION OF AIM. MOUNT SET SO THAT HIGHEST POINT CLEARS CEILING NOT LESS THAN 150mm UNLESS OTHERWISE NOTED.
1	KEYED NOTE REFERENCE.
S_M	MANUAL MOTOR CONTROLLER.

ELECTRICAL CONDUIT

METRIC SIZES (mm)	ENGLISH SIZES (INCH)
16	1/2
21	3/4
27	1
35	1 1/4
41	1 1/2
53	2
63	2 1/2
78	3
91	3 1/2
103	4
129	5
155	6

CONDUIT (METRIC TO ENGLISH CONVERSION TABLE)

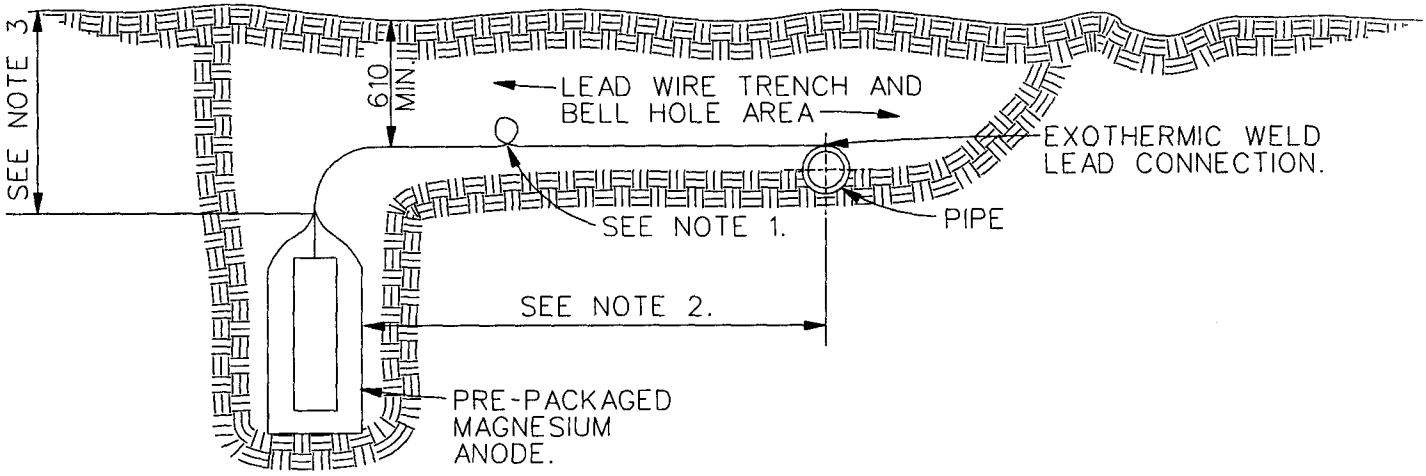

VERTICAL ANODE INSTALLATION

N.T.S.

NOTES:

1. ADEQUATE SLACK SHALL BE LEFT IN LEAD WIRE TO PREVENT DAMAGE TO LEAD DURING BACKFILLING.
2. ANODE MAY BE A MINIMUM OF 915mm AND A MAXIMUM OF 3050mm FROM STRUCTURE TO WHICH ATTACHED, EXCEPT AS OTHERWISE NOTED ON DRAWINGS OR SPECIFICATIONS.
3. TOP OF ANODE TO BE INSTALLED AT A DEPTH EQUAL TO OR EXCEEDING DEPTH OF STRUCTURE BUT IN NO CASE LESS THAN 915mm.

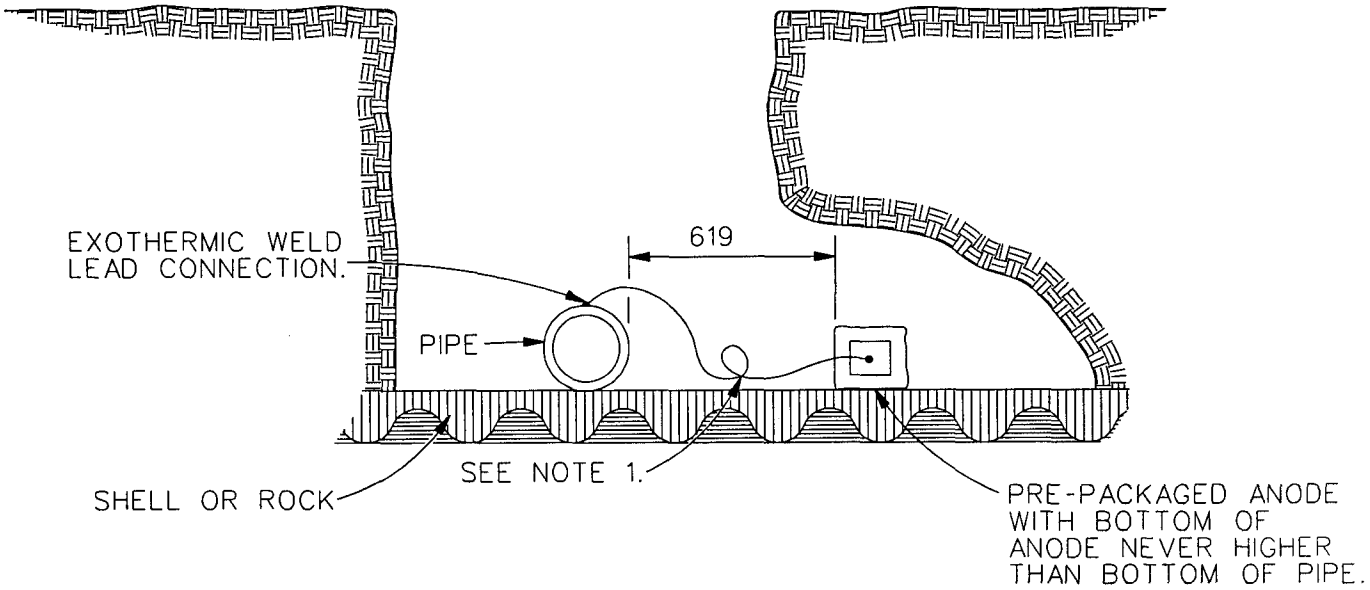

HORIZONTAL ANODE INSTALLATION

(WHERE BOTTOM OF TRENCH IS ROCK)
N.T.S.

NOTE:

1. ADEQUATE SLACK SHALL BE LEFT IN LEAD WIRE TO PREVENT DAMAGE TO LEAD DURING BACKFILLING.

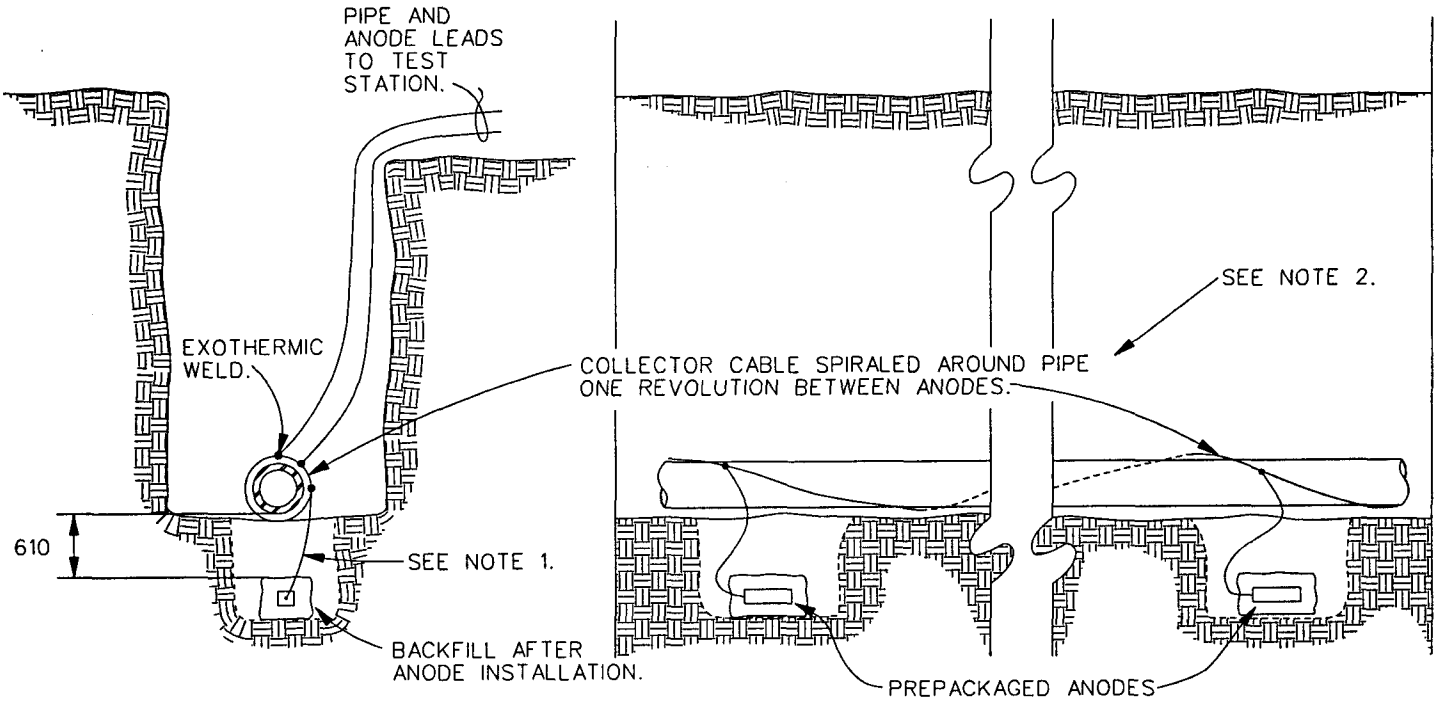

HORIZONTAL ANODE INSTALLATION

(BOTTOM OF TRENCH METHOD)
N.T.S.

NOTES:

1. ADEQUATE SLACK SHALL BE LEFT IN LEAD WIRE TO PREVENT DAMAGE TO LEAD DURING BACKFILLING.
2. SPIRALING OF COLLECTOR CABLE IS NOT MANDATORY IF CONSTRUCTION CONDITIONS DO NOT PERMIT SPIRALING.

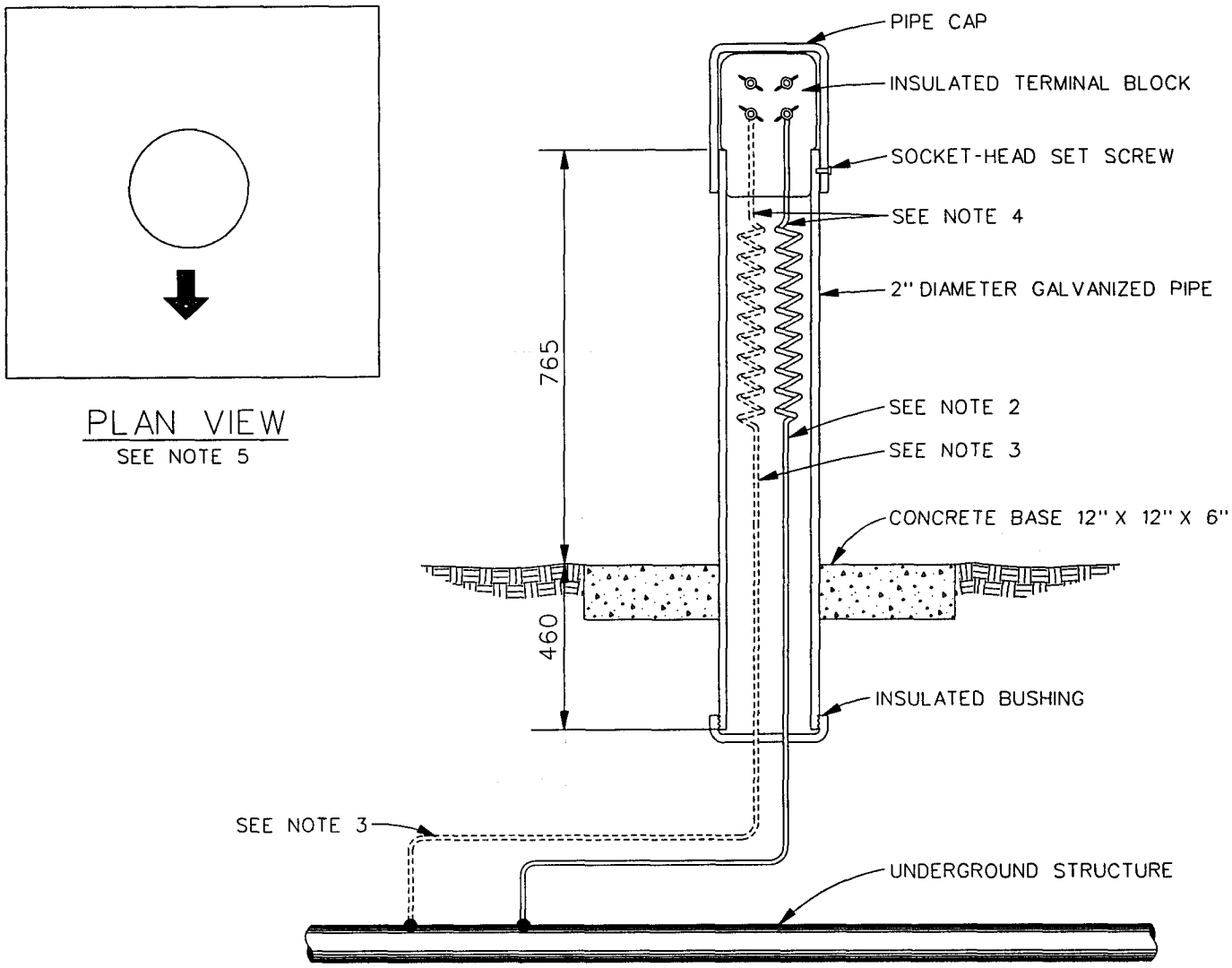

TEST STATION - ABOVE GROUND

FOR POTENTIAL MEASUREMENTS

N.T.S.

NOTES:

1. THE TYPE OF TEST STATION SHALL BE AS SPECIFIED ON THE CONTRACT DRAWINGS, OR IN THE SPECIFICATIONS, OR AS OTHERWISE DIRECTED BY THE CONTRACTING OFFICER.
2. PROVIDE ONE TEST LEAD UNLESS OTHERWISE INDICATED ON THE CONTRACT DRAWINGS, OR IN THE SPECIFICATIONS. THE TEST LEAD SHALL COLOR CODED RED.
3. A SECOND TEST LEAD IF REQUIRED SHALL BE COLOR CODED RED.
4. LEAVE SUFFICIENT SLACK IN LEADS TO ALLOW REMOVAL OF THE TERMINAL BLOCK.
5. INSCRIBE AN ARROW IN CONCRETE BASE POINTING IN THE DIRECTION OF THE BURIED STRUCTURE.
6. OTHER COMMERCIALLY AVAILABLE TEST STATIONS WILL BE ACCEPTABLE IF APPROVED BY THE CONTRACTING OFFICER.

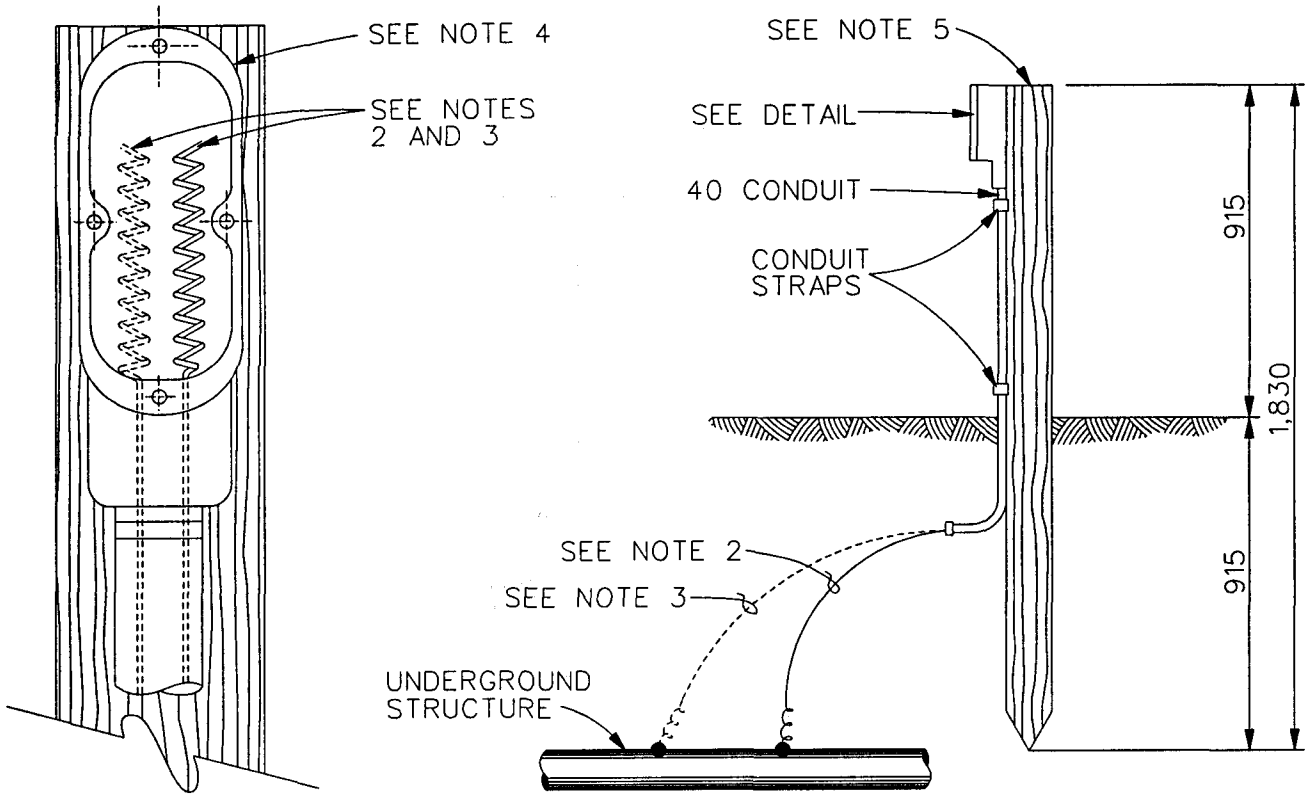

DETAIL

TEST STATION - ABOVE GROUND

FOR POTENTIAL MEASUREMENTS

N.T.S.

NOTES:

1. THE TYPE OF TEST STATION SHALL BE AS SPECIFIED ON THE CONTRACT DRAWINGS, OR IN THE SPECIFICATIONS, OR AS OTHERWISE DIRECTED BY THE CONTRACTING OFFICER.
2. PROVIDE ONE TEST LEAD UNLESS OTHERWISE INDICATED ON THE CONTRACT DRAWINGS, OR IN THE SPECIFICATIONS. THE TEST LEAD SHALL COLOR CODED RED.
3. A SECOND TEST LEAD IF REQUIRED SHALL BE COLOR CODED RED.
4. TEST STATION BOX SHALL BE CONDULET TYPE COMPLETE WITH GASKET AND COVER, SUBJECT TO APPROVAL BY THE CONTRACTING OFFICER.
5. WOOD POST SHALL BE 4" X 4" X 6'-0" LONG, PENTACHLORAPHENOL TREATED.
6. OTHER COMMERCIALLY AVAILABLE TEST STATIONS WILL BE ACCEPTABLE IF APPROVED BY THE CONTRACTING OFFICER.

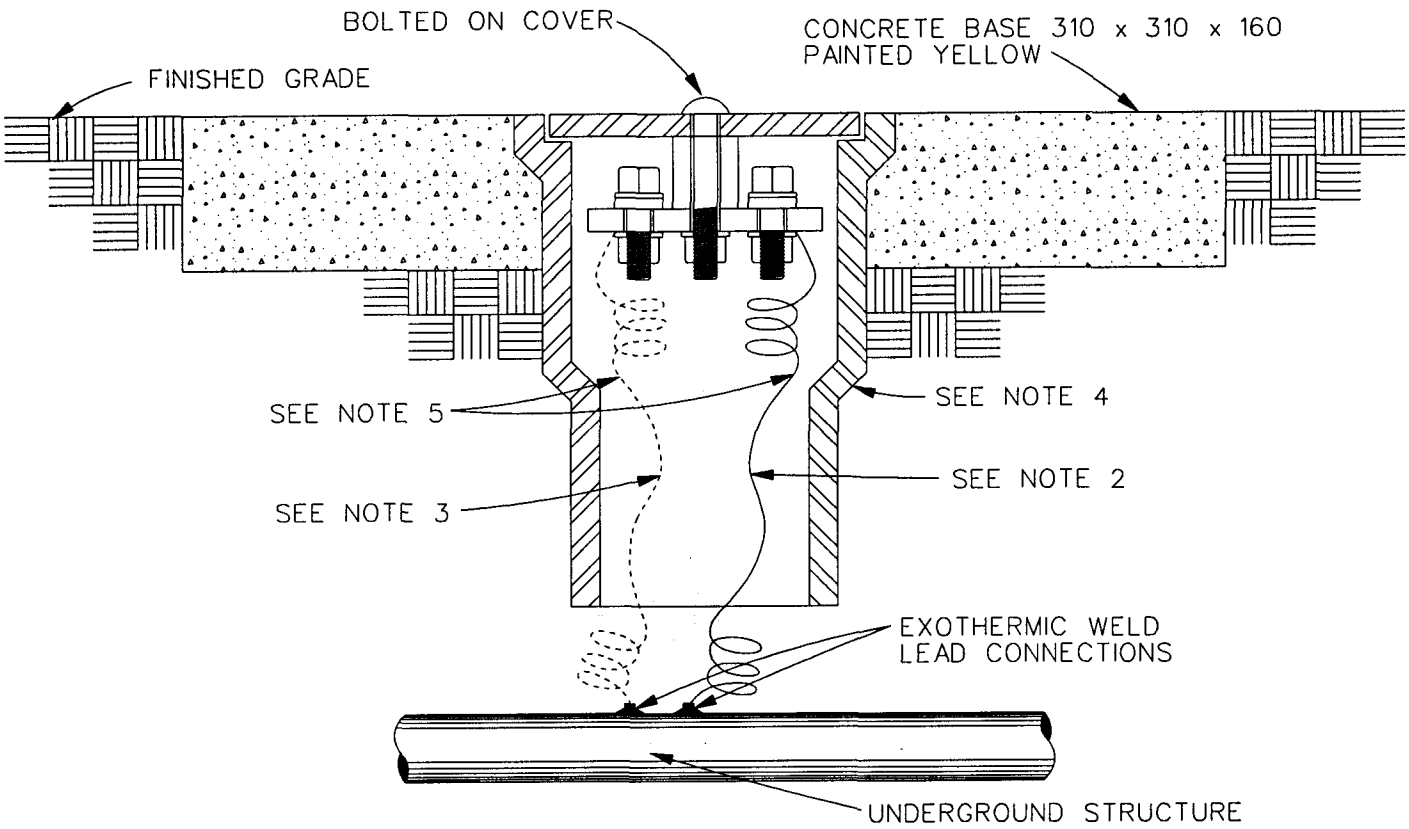

TEST STATION - FLUSH MOUNTED (FOR POTENTIAL MEASUREMENTS)

N.T.S.

NOTES:

1. THE TYPE OF TEST STATION SHALL BE AS SPECIFIED ON THE CONTRACT DRAWINGS, OR IN THE SPECIFICATIONS, OR AS DIRECTED BY THE CONTRACTING OFFICER.
2. PROVIDE ONE TEST LEAD UNLESS OTHERWISE INDICATED ON THE CONTRACT DRAWINGS OR IN THE SPECIFICATIONS. THE TEST LEAD SHALL BE COLOR CODED RED.
3. A SECOND TEST LEAD, IF REQUIRED SHALL BE COLOR CODED RED.
4. CURB BOX SHALL BE A STANDARD PRODUCT, AND MAY BE MADE OF CAST IRON OR PLASTIC. THE BOX SHALL BE COMPLETE WITH A TWO CONTACT TERMINAL STRIP BOLTED TO COVER AND READY TO RECEIVE THE TEST LEADS.
5. LEAVE SUFFICIENT SLACK IN LEADS TO ALLOW REMOVAL OF THE COVER FOR TESTING.
6. OTHER COMMERCIALLY AVAILABLE TEST STATIONS WILL BE ACCEPTABLE IF APPROVED BY THE CONTRACTING OFFICER.

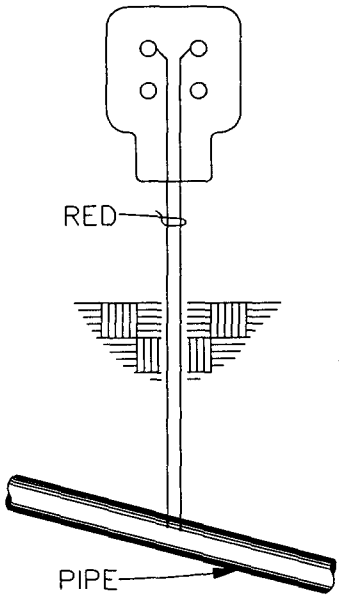

POTENTIAL
TEST STATION

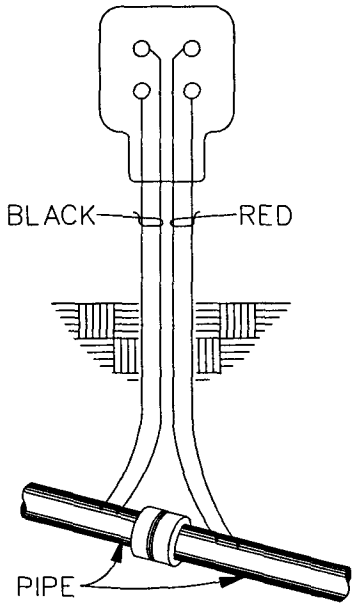

INSULATING JOINT
TEST STATION

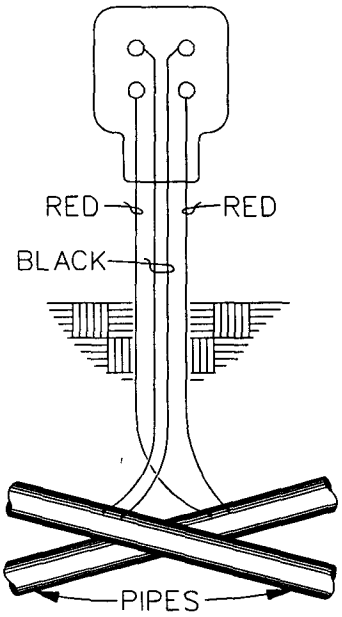

LINE CROSSING
TEST STATION

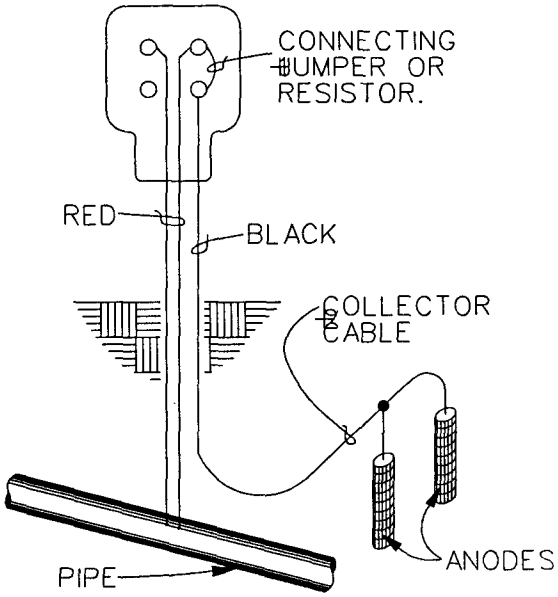

GALVANIC ANODE
TEST STATION

TEST STATION CONNECTIONS

N.T.S.

NOTE:

1. ALL LEADS SHALL BE #12 AWG TYPE "TW", RHW-USE OR POLYETHYLENE INSULATED.

PLATE E24

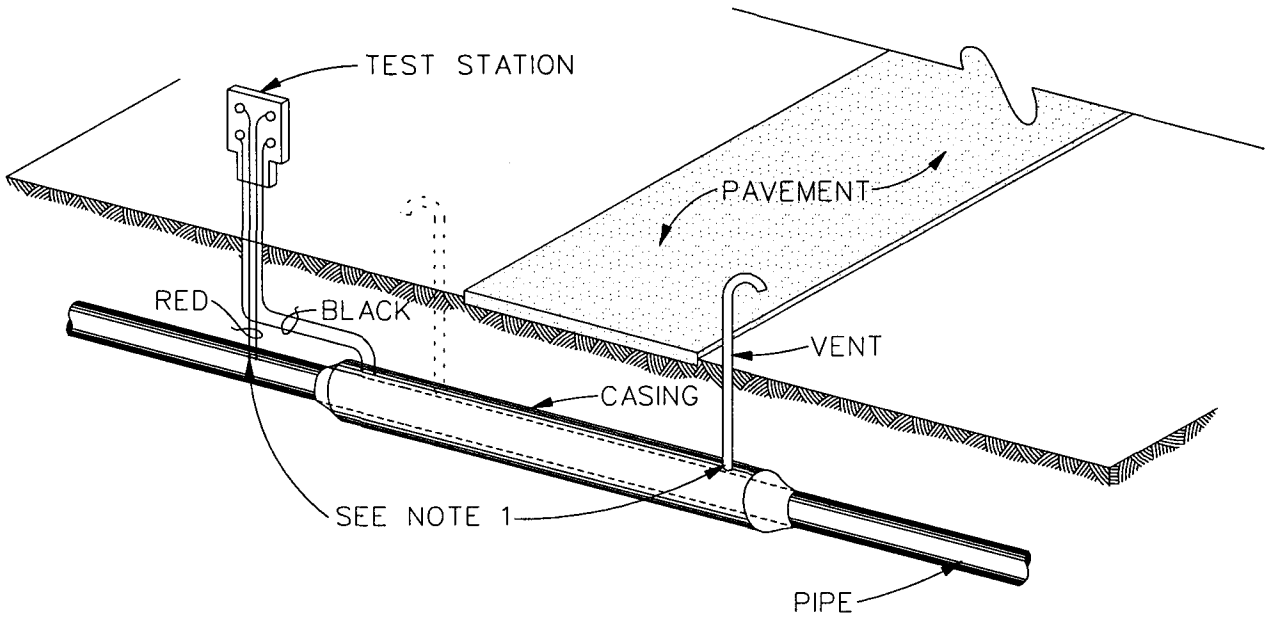

CASED ROADWAY CROSSING

N.T.S.

NOTES:

1. IF THE CASING HAS TWO VENTS ABOVEGROUND, THE CASING LEADS MAY BE OMITTED. IF ONLY ONE VENT IS PROVIDED, BOTH LEADS SHALL BE PROVIDED AND CONNECTED TO THE UNVENTED END. IF NO VENTS ARE PROVIDED, CONNECT THE BLACK CASING LEADS TO THE FAR END OF CASING.

2. ALL LEADS SHALL BE #12 AWG., TYPE "TW", RHW-USE, OR POLYETHYLENE INSULATED.

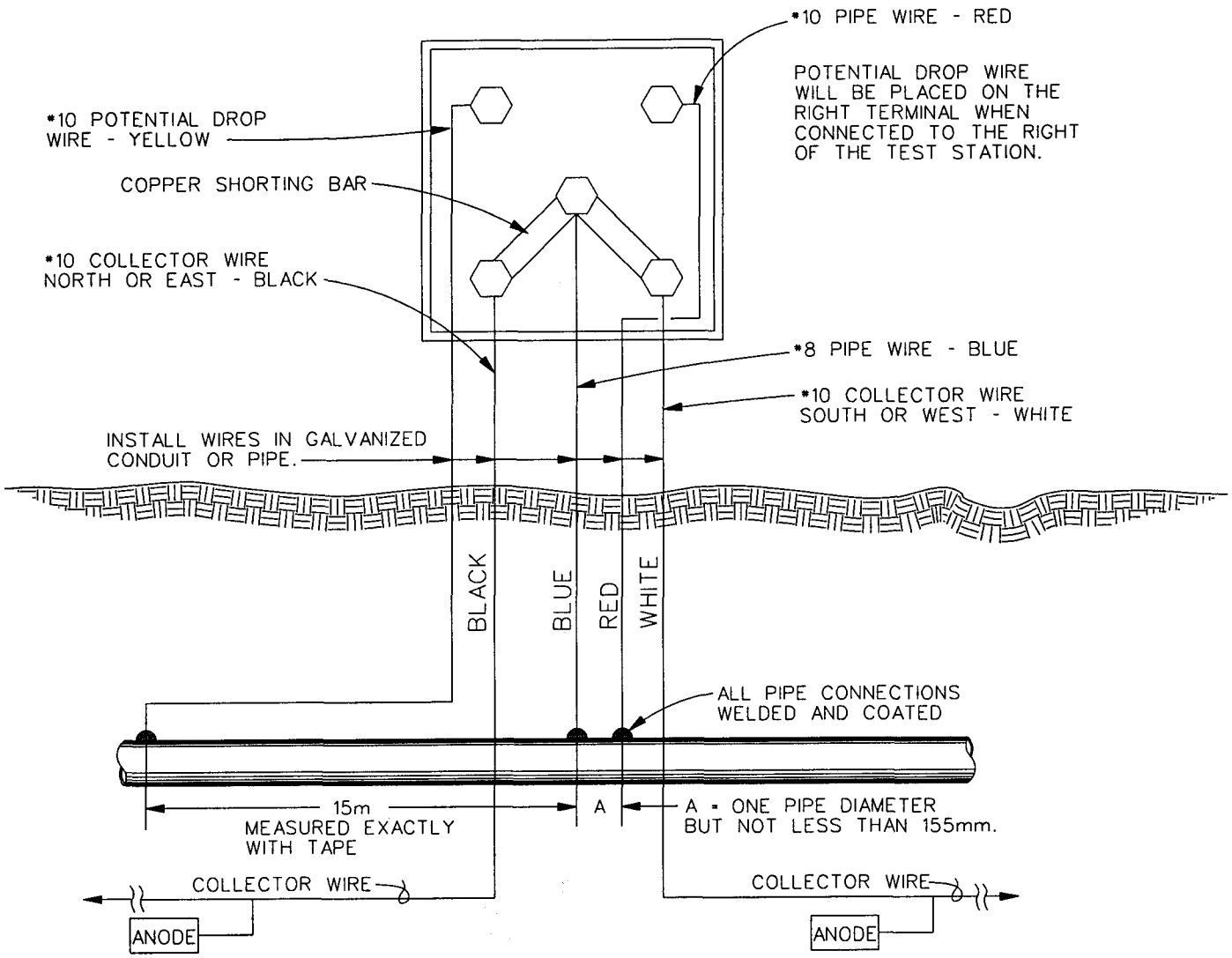

TEST STATION

FOR CONTINUOUS COLLECTOR WIRE

N.T.S.

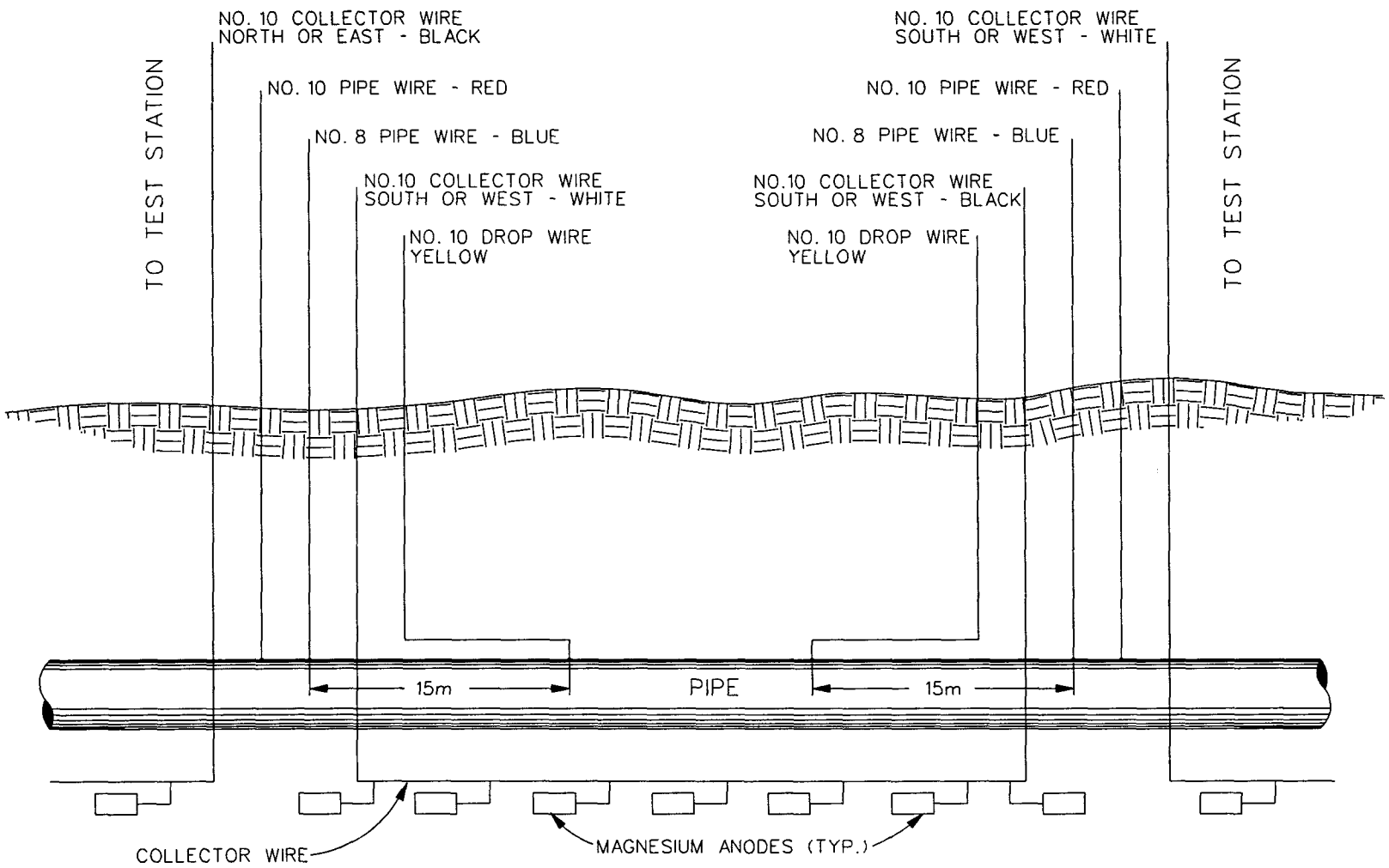

TEST STATION CONNECTIONS

FOR CONTINUOUS COLLECTOR WIRE

N.T.S.

NOMINAL PIPE OR CASING DIAMETER (mm)	MAXIMUM DISTANCE BETWEEN ANODES ON ELECTRICALLY CONTINUOUS NEW COATED PIPING
50 (2")	450m
80 (3")	300m
100 (4")	230m
150 (6")	150m
200 (8")	120m
250 (10")	100m
300 (12")	80m
350 (14")	75m
400 (16")	65m
450 (18")	60m
500 (20")	50m
600 (24")	45m
650 (26")	40m
750 (30")	35m
900 (36")	30m

THE ABOVE TABLE BASED ON:

(A) USE OF 7.71 Kg PACKAGED MAGNESIUM ANODE WITH TWENTY YEAR DESIGN LIFE.

(B) MINIMUM COATING RESISTANCE OF 50,000 OHMS PER SQUARE FOOT AND MAXIMUM 3% BARE SURFACE AREA WITH PIPE IN PLACE.

(C) AVERAGE CURRENT DENSITY OF 1.5 MILLIAMPERES PER SQUARE FOOT OF BARE SURFACE AREA.

(D) INDIVIDUAL PIPING RUNS HAVING ELECTRICAL CONTINUITY AND BEING INSULATED FROM CONNECTING OR FOREIGN STRUCTURES.

MAGNESIUM ANODE INSTALLATION SPACING

NOTES TO DESIGNER:

1. ON PIPING RUNS REQUIRING MORE THAN ONE ANODE, ANODES SHALL CONFORM TO MAXIMUM DISTANCES SHOWN ABOVE, OR SPACED AT EQUAL LESSER INTERVALS ALONG THE LINE BASED ON LENGTH OF LINE AND NUMBER OF ANODES REQUIRED.

2. WHERE THE TOTAL LENGTH OF PIPE TO BE PROTECTED IN ANY SINGLE RUN IS LESS THAN THAT SHOWN IN THE TABLE ABOVE, INSTALL ONE ANODE NEAR MIDPOINT OF PIPE OR CASING.

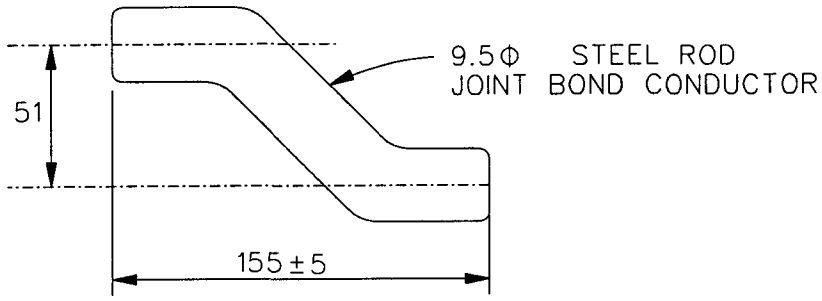

STEEL PIPE JOINT BOND

N.T.S.

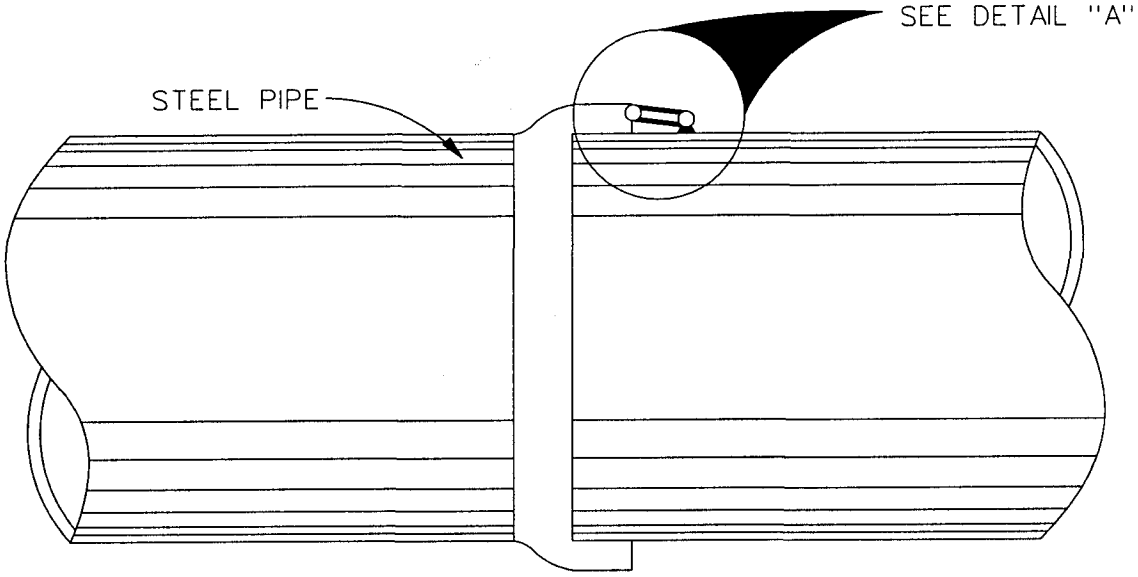

ELEVATION

N.T.S.

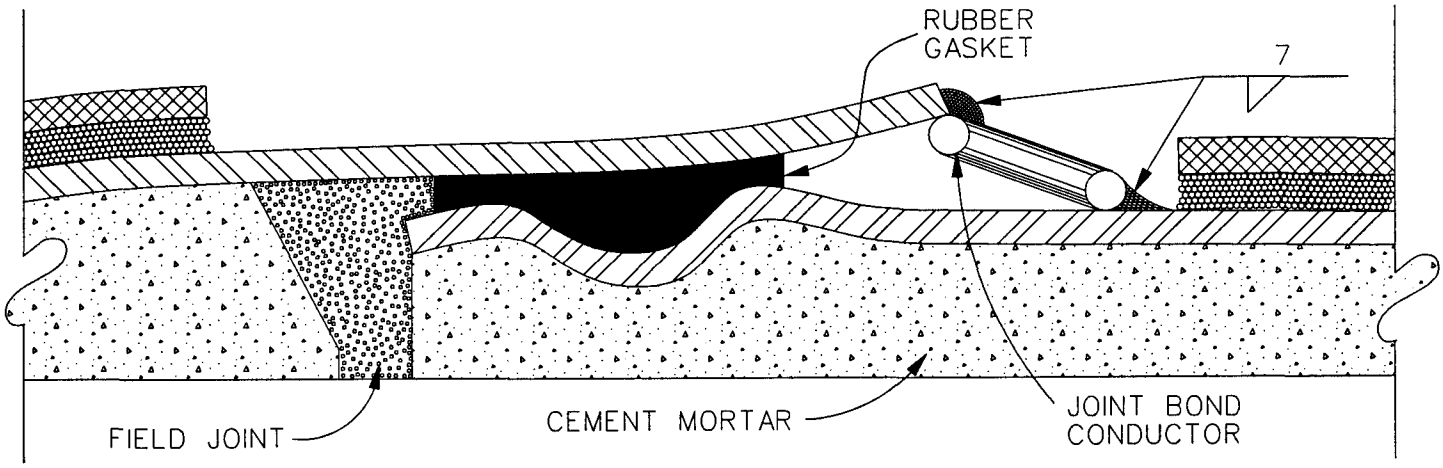

DETAIL "A"

N.T.S.

PLATE E29

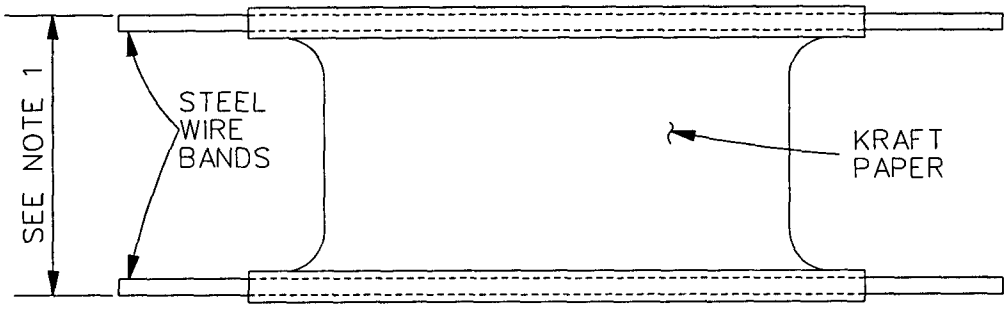

DETAIL OF PAPER JOINT COVER

N.T.S.

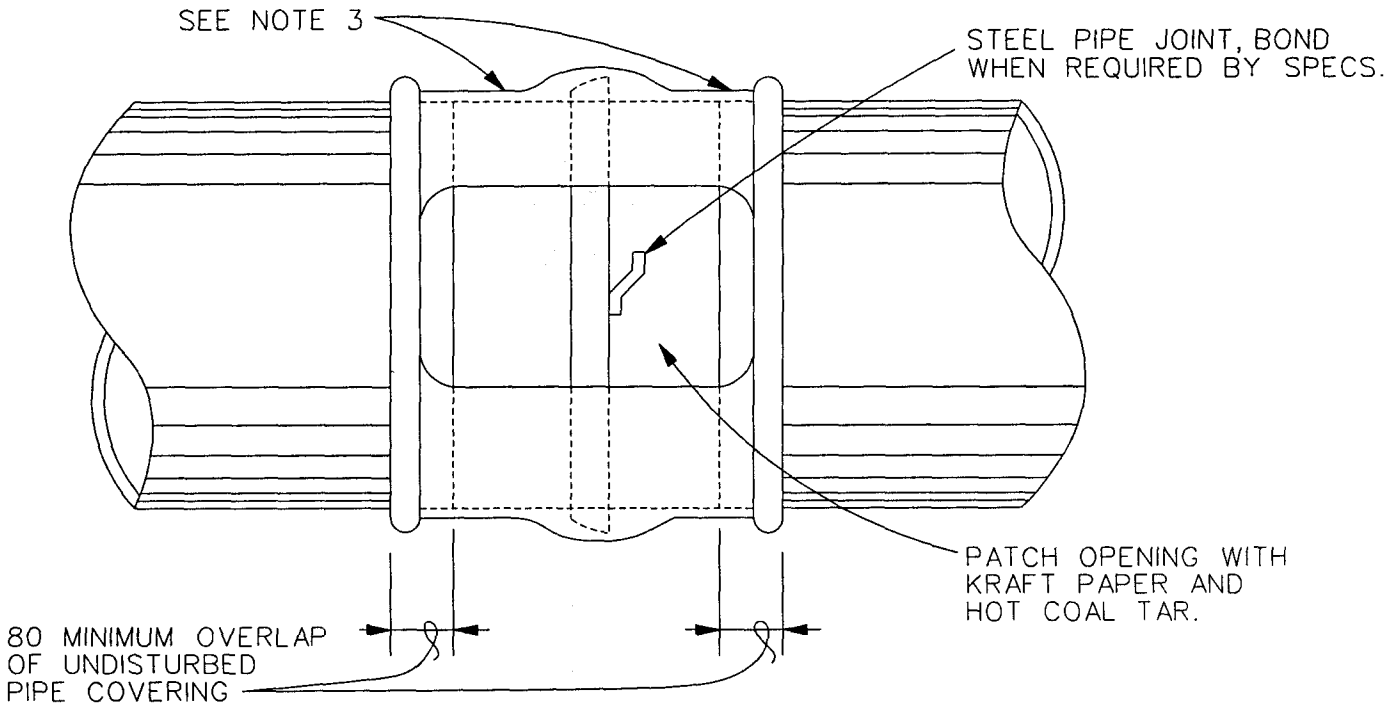

INSULATING COUPLING

N.T.S.

NOTES:

1. WIDTH AS REQUIRED TO PROVIDE OVERLAP OF 80mm EACH SIDE AS INDICATED.
2. FILL JOINT COVER WITH HOT COAL TAR ENAMEL FROM ONE SIDE ONLY UNTIL THE AIR IS EXHAUSTED AND COVER IS FILLED.
3. OUTER SHOULD BE STRIPPED BACK NOT LESS THAN 80mm EACH SIDE OF JOINT TO ALLOW MAXIMUM BOND OF THE NEW TAR TO EXISTING TAR COATING.

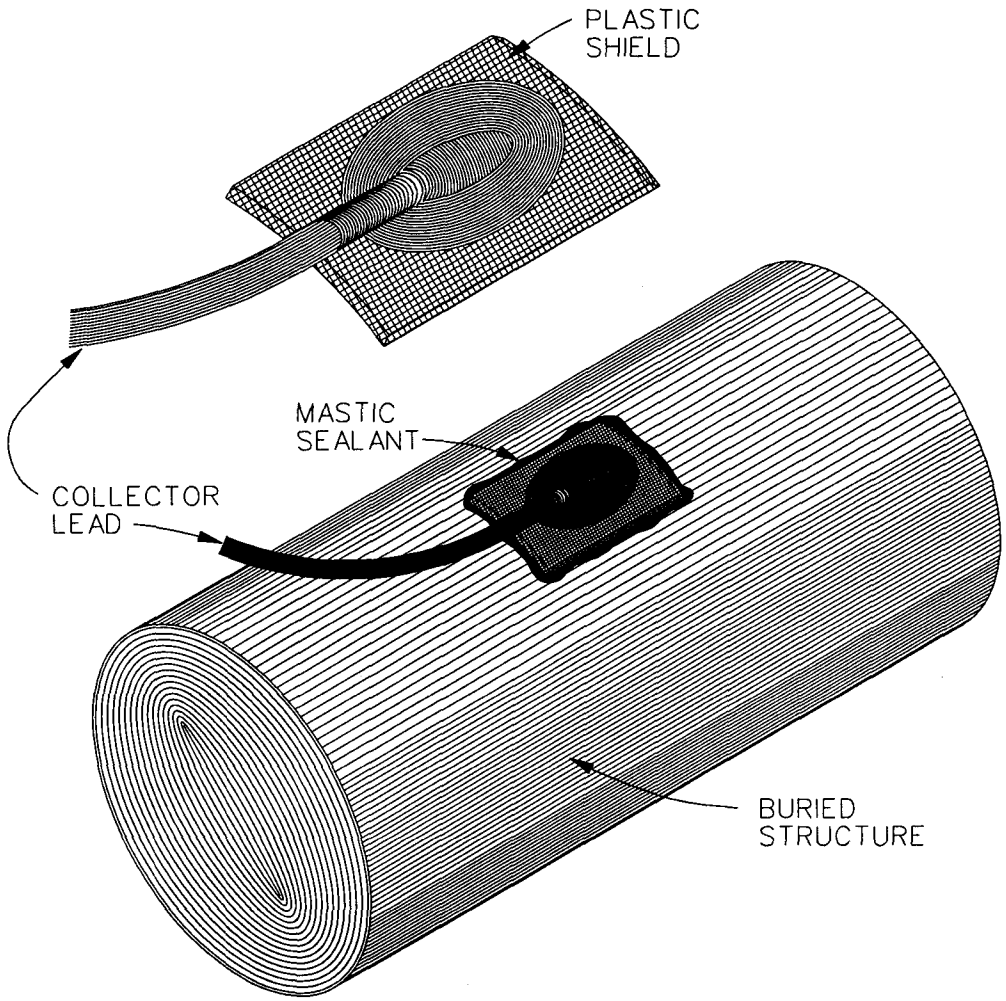

BACKFILL SHIELD

N.T.S.

NOTES:

1. SHIELD SHALL BE COMPLETELY FILLED WITH MASTIC SEALANT AND PRESSED IN CONTACT WITH THE PIPE OVER THE CONNECTION, UNTIL MASTIC IS SQUEEZED OUT OF THE SHIELD.

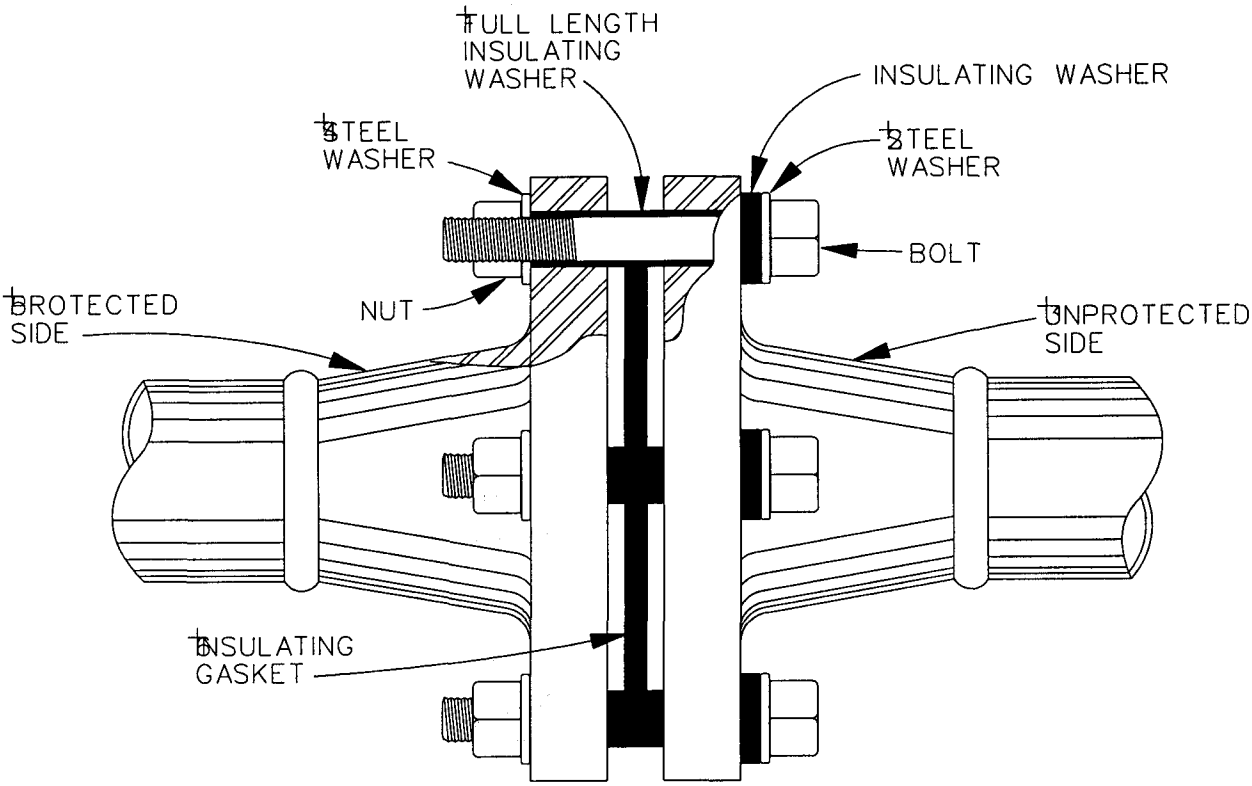

INSULATED FLANGED JOINT

N.T.S.

1. SEE SPECIFICATIONS FOR GASKET, WASHER & SLEEVE MATERIALS.
2. CARE SHALL BE TAKEN FOR PROPER ALIGNMENT BEFORE ASSEMBLY.
3. INSULATED JOINT WILL BE INSTALLED IN THE PIPING WHERE INDICATED ON THE DRAWING, AND BEFORE ANY OTHER CONNECTIONS TO PIPING ARE MADE.
4. INSULATED JOINTS SHALL BE ASSEMBLED AND INSTALLED IN ACCORDANCE WITH THE JOINT ASSEMBLY MANUFACTURER'S RECOMMENDATIONS.

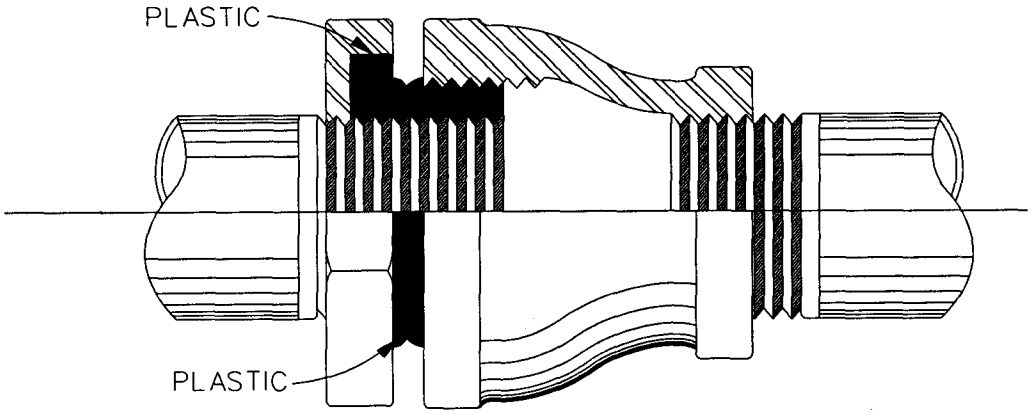

INSULATED FLANGED JOINT

N.T.S.

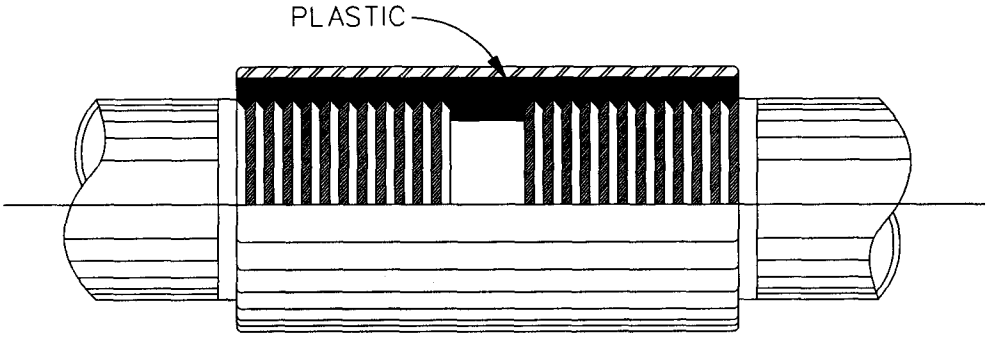

INSULATING COUPLING

N.T.S.

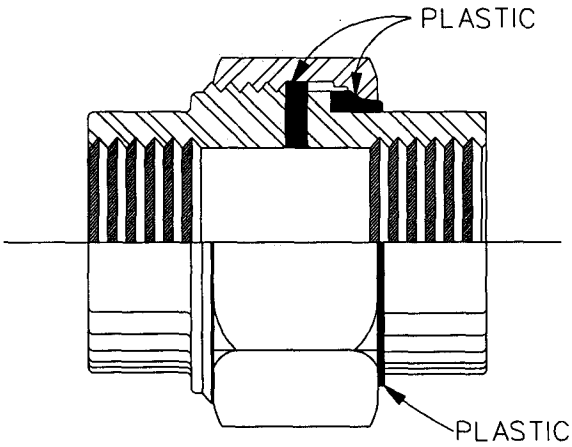

INSULATING UNION

N.T.S.

APPENDIX B

DESIGN REVIEW CHECKLIST

ELECTRICAL

1. Provide complete electrical legends for exterior and interior.

2. When extending aerial primary lines for short distances, the configurations and material shall be the same as existing unless directed otherwise.

3. Provide details for congested poles.

4. On cluster-mounted transformers, do not put fuse cutouts on the same side of pole as middle transformer.

5. Do not leave aluminum in contact with earth.

6. For 4/0 copper primary and larger, or aluminum equivalent, require 95.25mm x 120.65mm (3-3/4" x 4-3/4") crossarms, special deadends, and show calculations for guy strengths.

7. Taps to primary for transformers should show hot line clamps attached to stirrups (bail).

8. Provide complete electrical and communication plan and details: Underground duct banks, location, duct size, direct burial or concrete encased; identification of primary and secondary lines; conductor size and quantity, overhead lines, and secondary lines; conductor size and quantity, overhead lines, primary and secondary; pole size and class; light standards, location, fixture, base and reinforcing, pole material hardware list.

9. Feeder circuits shall coincide with utility drawings for size and location. Show correct voltage, conductor size and material for existing primary being tapped or extended.

10. Any extension of an existing loop primary shall maintain loop capability.

11. Do not require surge arresters in deadfront, pad-mounted transformers with loop feed.

12. Provide a one-line or riser diagram for the fire alarm, telephone, and television systems. Indicate correct conduit and wire sizes on plans or in the specifications.

13. Show grounding for building service and separately derived systems. Insure that grounding electrode conductors are shown and sized on the drawings. Special grounding requirements shall be appropriately detailed.

14. Show or note boundaries (in all three dimensions) of hazardous areas on drawings. Show class and division identification numbers and group identification letter for hazardous locations as required by the NEC. Indicate maximum temperature for lighting fixtures when applicable.

15. Supply battery-operated emergency lights from an unswitched hot leg of a light circuit serving room where emergency light is located.

16. Provide emergency lights in stairwells of multi-story buildings.

17. Provide clearance around electrical equipment for operation and maintenance as required by the equipment manufacturer, National Electrical Code or National Electrical Safety Code, whichever is greatest. Required clearances are to be indicated with dashed lines and coordinated with other disciplines.

18. Insure that a note is added to the drawings prohibiting the installation of conduit in concrete floor toppings less than 76mm thick.

19. Do not allow back-to-back or thru-wall boxes in walls where sound transmission is objectionable.

20. Do not show conductor insulation types on drawings.

21. Provide 10-25% spare circuit breakers in branch panelboards. Spare breakers should be consistent with panelboard usage; e.g., 20A/1P type for lighting and receptacle panels and 3-pole for equipment and distribution boards sized typically for loads encountered. Leave "space

only" where additional capacity exists. Designers shall ensure that panelboard mains are adequate to accommodate potential new loads within reasonable limits.

22. Rooms for storing and charging batteries are not considered as hazardous areas as defined by the National Electrical Code. Provide adequate ventilation with an interlock between fans and charging equipment.

23. All fire alarms being transmitted to central station equipment shall be compatible with existing equipment.

24. Receptacles with G.F.I. shall be installed only where required by the National Electrical Code. See Chapter 3 of TM 5-811-2/AFM 88-9, Chapter 2.

25. White Sands Missile Range: Wooden cross arm braces are required on 15 KV aerial distribution construction.

26. Mess hall gas-fired toasters require 110V AC for conveyor motor. Steam-fired vegetable cookers require 110V AC for controls.

27. The cathodic protection designer should coordinate with the underground piping designer to assure that pipe coating specified in the pipe specification.