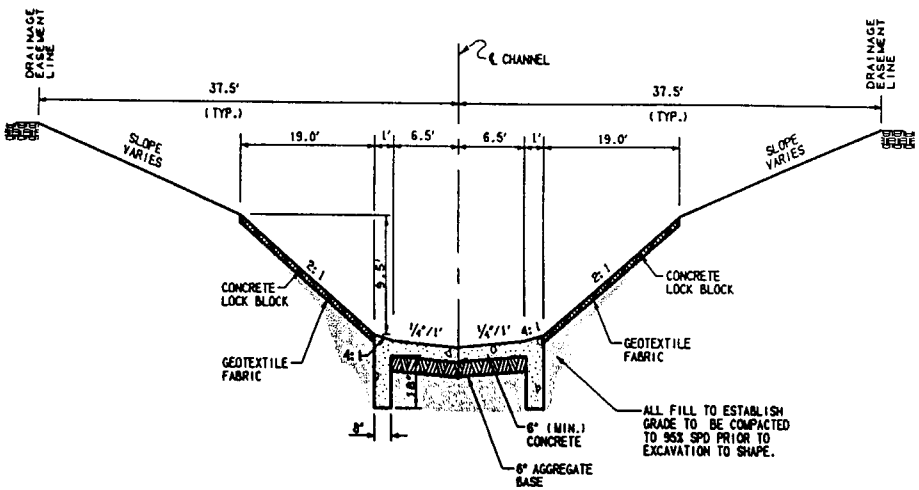

TYPICAL SECTION 1-CONCRETE BOTTOM & CONCRETE LOCK BLOCK SLOPES

STA. 52+79.01 TO 57+96.76
STA. 58+50.00 TO 77+00.00
(EXCEPT BRIDGE STA. 66+09.45 TO 66+89.72)

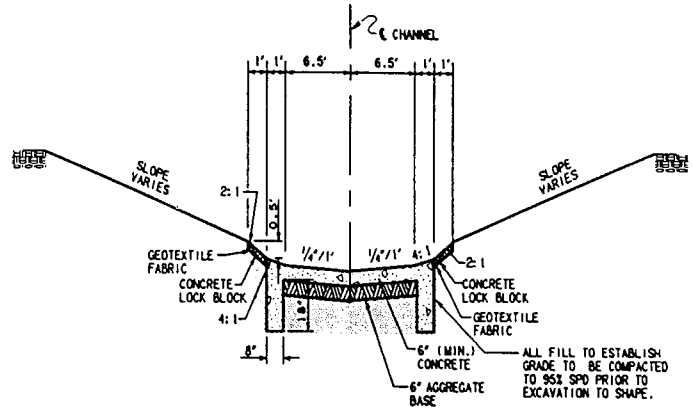

TYPICAL SECTION 2-CONCRETE BOTTOM & CONCRETE LOCK BLOCK SLOPES

STA. 77+00.00 TO 81+33.90

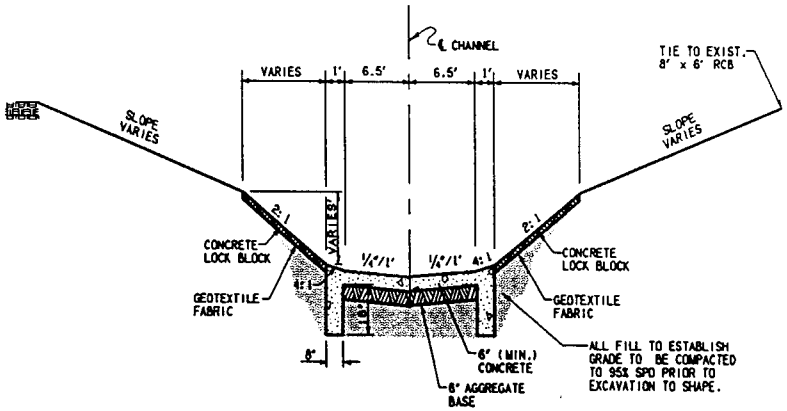

TYPICAL SECTION 3-CONCRETE BOTTOM & CONCRETE LOCK BLOCK SLOPES

STA. 57+96.76 TO 58+50.00

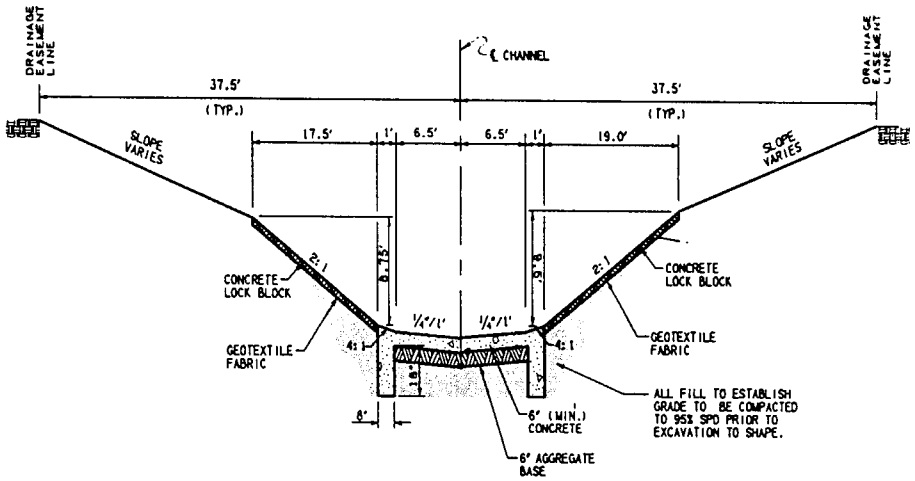

TYPICAL SECTION 4-CONCRETE BOTTOM & CONCRETE LOCK BLOCK SLOPES

STA. 50+00.00 TO 51+85.98

NO.	DATE	REVISION	CHKD.
2			
1			

CITY OF OKLAHOMA CITY

DRAINAGE IMPROVEMENTS

TYPICAL SECTIONS

OKR2011964
CITY OF OKLAHOMA CITY
UNNAMED TRIBUTARY OF BLUESTEM LAKE
EROSION CONTROL
ENCLOSURE 2 OF 4