DEPARTMENT OF THE ARMY
TULSA DISTRICT, CORPS OF ENGINEERS
1645 SOUTH 101st EAST AVENUE
TULSA, OKLAHOMA 74128-4609

NOTICE OF LEASING NO. DACW56-9-09-017
GOVERNMENT OWNED REAL PROPERTY
FOR AGRICULTURAL, GRAZING OR HAY HARVESTING PURPOSES
ROBERT S. KERR LOCK AND DAM, OKLAHOMA

Sealed offers subject to the terms and conditions set forth herein, for the leasing of property of the United States listed in the Notice of Leasing, will be received until the time, date, and at the place indicated below:

SEALED OFFERS ARE TO BE MARKED AND ADDRESSED AS FOLLOWS:

RETURN ADDRESS:
(Name and address of Responder)

TO: **A & G LEASE OFFERS**
Corps of Engineers
ATTN: Real Estate Division
1645 South 101st East Avenue
Tulsa, OK 74128

PROPERTY LOCATION: Robert S. Kerr Lock and Dam, Oklahoma, described by area numbers below.

TIME OF PRE-OPENING CONFERENCE: 1:00 p.m., Tuesday, November 18, 2008

PLACE OF PRE-OPENING CONFERENCE: Corps of Engineers District Office, 1645 South 101st East Avenue, Tulsa, OK 74128, Room 210 (A Government issued I.D. is required for access to the District Office (e.g. State/Military ID or Drivers License). For a Map to the District Office, see Exhibit A.

OFFERS DEADLINE: 4:30 p.m., Friday, November 21, 2008

OPENING: Tuesday, November 25, 2008

PLACE OF OPENING: Corps of Engineers District Office, 1645 South 101st East Avenue, Tulsa, OK

OFFER DEPOSIT: Twenty-five percent **(25%)** of the annual amount offered

ISSUED BY: Department of the Army, Tulsa District, Corps of Engineers

POINT OF CONTACT

Robert S. Kerr/Wister Lake Offices:	Tish Livesay	918-655-7206, Ext 6510
	or	
Real Estate Division District Office:	Malinda Lefave	918-669-7686
	Vicki Yoder	918-799-5843, Ext 3128

AUTHORITY: The authority for granting these leases is Title 10, U.S.C., Section 2667. The successful respondent will be required to enter into a lease with the United States. A sample of the lease required by the Government is attached. The lease will be subject to any existing easements for electric power transmission lines, telephone or telegraph lines, water, gas, gasoline, oil, or sewer pipelines, or other facilities located on the property covered by said lease.

TERM: The term of the lease will be for **5 years,** beginning **January 1, 2009,** and ending **December 31, 2013 and is revocable at will by the Secretary of the Army. The lease may be renewed for an additional 5-year term at the discretion of the Government and is revocable at will by the Secretary of the Army.**

LEASE PROPERTY:

a. Detailed maps of the lease areas may be obtained from the Robert S. Kerr/Wister Lake Offices during normal business hours.

b. The description of the property and the map are believed to be correct, but any error or omission in the description of the property or on the map shall not constitute any ground or reason for nonperformance of the provisions and conditions of the lease or claim by the lessee for any refund or deduction from rental.

c. Lessees will be responsible to familiarize themselves with the location of all boundary markers and survey monuments. It will be their responsibility to see that they are not disturbed during the lease operation.

SERVICES: The lessee may, at the discretion of the Chief of Real Estate, be authorized to perform services in lieu of cash rental. Services may include, but are not limited to, erosion control, wildlife food plots, fire guards, overseeding pastures with legumes or small grain, applying fertilizer, and/or construction of boundary fences. Services in lieu of cash rental must be agreed to in advance and documented in a Supplemental Agreement signed by all parties. Services approved and performed in lieu of cash rentals must be completed and accepted by the Government prior to December 1 each year of the current lease. In the event of lease termination, the Lessee shall not be reimbursed for services performed in advance of the year in which termination occurs.

FARM ASSISTANCE PROGRAM: Approval through the Tulsa District, Corps of Engineers must be obtained prior to signing up the lease area under any Farm Assistance Program. If Lessee is 30 or more days **past due** on all or part of his lease **rental, and/or required services**, he will be ineligible to participate in federal financial assistance through the Farm Bill Program.

NOTICE: Some of the areas may have access only through privately owned property and the Government cannot guarantee ingress and egress to the land. The areas are subject to compatible wildlife management activities performed by project personnel. The land may be flooded at any time due to project operations. Prospective lessees should be prepared to move their personal property to privately owned higher ground during periods of flooding. Lessees shall have no claim against the United States for damages of any character on account thereof.

CASH RENT OFFERS: Cash rent must be in whole dollars. Any offer submitted in an amount other than in whole dollars will be rounded down to the nearest whole dollar.

INSTRUCTIONS TO RESPONDENTS

1. **OFFERS SUBJECT TO THESE TERMS**. All offers submitted shall be deemed to have been made with full knowledge of all the terms herein contained. Respondents are expected to inspect the property and form their own conclusions as to its suitability for the stated purposes. Failure to make such inspection will not constitute grounds for any claim for adjustment or for the withdrawal of the offer after the time of opening offers. The property is now subject to inspection by prospective respondents. The Government makes no guaranty or warranty, either expressed or implied, with respect to the property.

2. **OFFER FORMAT**. Offers **must** be submitted in the attached format, which is provided, on pages **23 thru 28**. *(Page 25 must be submitted if you are submitting as a corporate entity. Page 26 must be submitted if you are submitting your offer as a governmental entity. Page 27 must be submitted if you are submitting your offer as a partnership.)* **For the offer to be valid, a complete Request for Grantee Social Security Number and/or Taxpayer ID Number form on page 28 must be included with your offer**. The Corps of Engineers requires each person doing business with the agency to furnish such person's taxpayer identification number. This information is mandatory under the Debt Collection Improvement Act of 1996, Public Law 104-134, April 26, 1996, 110 Stat 1321-358. The agency intent is to use such number for purpose of collecting and reporting on any delinquent amounts arising out of such person's relationship with the Government. **Failure to provide accurate information may result in your lease request being denied.**

3. **EXECUTION OF OFFERS**. Each offer must give the full address of the responder and be signed with the responder's usual signature. Any additional sheets shall be identified with the responder's name. An offer executed by an agent on behalf of the responder shall be accompanied by an authenticated copy of the power of attorney, or other evidence of authority. If the responder is a corporation, the Certificate of Corporate Responder must be executed. If the offer is signed by the secretary of the corporation, the Certificate must be executed by another officer of the corporation. In lieu of the Certificate, records of the corporation which show the authority of the officer signing, and which the secretary or assistant secretary, under the corporate seal, certifies to be true copies, must be attached.

4. **DEPOSIT REQUIRED**. No offer will be considered without a deposit approximately equal to and not less than twenty-five percent (25%) of the annual rental offered, to guarantee that the responder will enter into a written lease and pay the balance of the rental due within thirty (30) days after receipt of written notice of acceptance of his/her offer and a draft of lease for execution. Such guarantee must be in the form of a <u>money order or check, payable to the "FAO USAED, TULSA"</u>. The deposits of unsuccessful responders will be returned, as promptly as possible, after rejection. However, in the event of default by any responder, that responder's deposit may be applied by the Government to any Government loss, cost and expense occasioned thereby, including any incurred in leasing the property and any difference between the rental for another lease, if the latter amount is less. The responder is liable for the full amount of damages sustained by the Government because of his/her default; such liability is not limited to the amount of the responder's deposit.

5. **SUBMISSION OF OFFERS**. It will be the duty of each responder to have the offer delivered by the time and at the place prescribed in the Notice of Leasing. Offers will be securely kept, unopened. No responsibility will attach for the premature opening of an offer not properly addressed and identified.

6. **LATE OFFERS, MODIFICATION OR WITHDRAWAL OF OFFERS**. The person whose duty it is to open the offers will decide when withdrawals of an offer will be considered. Offers may be modified or withdrawn only by written requests received from respondents prior to the time fixed for opening. Negligence in preparing the offer confers no right to withdraw the offer after it has been opened. Offers, modifications, or withdrawals received after the time fixed for opening and before award is made will be considered if sent by registered mail not later that the 7th calendar day prior to the date specified for receipt of offers or if sent by mail and it is determined by the Government that the late receipt was due solely to mishandling by the Government after receipt at the Government installation.

7. **OPENING OF OFFERS**. The November 25, 2008 opening **will not** be open to the public. Any Successful offeror will be notified by letter and the offer will be posted on the Tulsa District web site. All individuals with unsuccessful offers will be notified by mail and deposits returned. Any information submitted in support of the offer will, upon request, be held in strict confidence by the United States, if disclosure might tend to subject the responder to a competitive business disadvantage.

8. **AWARD OF LEASE**. Leases will be awarded to the highest and/or best responder who is responsive to this Notice of Leasing, provided that the responder is responsible, the responder is reasonable, and it is in the interest of the United States to accept it.

9. **PROCEDURE FOR AWARD**.

a. Following the opening, the Government may require any responder to furnish additional evidence of financial condition, ability to assume the obligations and responsibilities imposed by the lease, and other information the Government considers desirable. Failure to submit this information in 30 days or such other reasonable time as the Chief of Real Estate specifies may be the basis for rejecting the offer.

b. The lease will be awarded to the responder who offers the highest and/or best fixed annual rental and whom the Chief of Real Estate determines to be fully qualified financially, by experience, character and otherwise to furnish the facilities and services determined to be necessary to adequately serve the public demand at the proposed site.

10. **ACCEPTANCE OF OFFERS**. All offers will remain open for acceptance or rejection for 30 days from the date of opening. Notice of award will be given as soon as practicable to the successful responder personally, to a duly authorized representative, or in writing to the responder at the address indicated in the offer.

11. **DISPUTES**. Except as otherwise provided in this Notice of Leasing, any dispute concerning a question of fact arising under this Notice of Leasing which is not disposed of by agreement shall be decided by the District Commander or his duly authorized representative who shall mail or otherwise furnish a written copy of the decision to the responder. The decision of the District Commander shall be final and conclusive unless, within 30 days from the date of receipt of such copy, the responder mails or otherwise furnishes to the District Commander a written appeal addressed to the Secretary of the Army. The decision of the Secretary, or his duly authorized representative for the determination of such appeals, shall be final and conclusive unless determined by a court of competent jurisdiction to have been fraudulent, capricious, arbitrary, or so grossly erroneous as necessarily to imply bad faith, or not supported by substantial evidence. In connection with any appeal proceeding under this condition, the responder shall be afforded an opportunity to be heard and to offer evidence in support of appeal. Pending final decision of a dispute hereunder, the responder shall proceed diligently with the performance of the contract and in accordance with the District Commander's decision. This

condition does not preclude consideration of questions of law provided that nothing in this condition shall be construed as making final the decision of an administrative official, representative, or board on a question of law.

12. **REJECTION OF OFFERS**. The right is reserved, as the interests of the Government may require, to reject at any time any and all offers, to waive any informality in offers received, and to accept or reject any items of any offer unless such offer is qualified by specific limitation.

13. **DEFAULT**. In the event that the successful responder fails to enter into a lease within thirty (30) days after receipt of Government notification that his/her offer has been accepted and receipt of a draft lease for execution, or in the event that the successful responder fails to otherwise comply with the terms of this Notice of Leasing, the Government may declare the responder in default and retain the deposit as liquidated damages.

14. **ADDITIONAL INFORMATION**. Any additional information may be obtained from the Robert S. Kerr/Wister Lake Offices.

DESCRIPTION OF AREAS

THE FOLLOWING AREAS ARE AVAILABLE FOR GRAZING OR HAY HARVESTING PURPOSES ONLY:

AREA 148
This area contains approximately **130** acres, of which approximately 130 acres are useable for the authorized purposes, located in Section 25, T10N, R23E, Haskell County, Oklahoma and Section 30, T10N, R24E, Leflore County, Oklahoma, as shown on the map marked **Exhibit B**, attached hereto.

AREA 261
This area contains approximately **220** acres, of which approximately 220 acres are useable for the authorized purposes, located in Sections 1 and 2, T10N, R23E and Sections 35 and 36, T11N, R23E, Sequoyah County, Oklahoma, as shown on the map marked **Exhibit C**, attached hereto.

AREA 346
This area contains approximately **20** acres, of which approximately 17 acres are useable for the authorized purposes, located in Section 24, T11N, R23E, Sequoyah County, Oklahoma, as shown on the map marked **Exhibit D**, attached hereto.

AREA 713
This area contains approximately **100** acres, of which approximately 100 acres are useable for the authorized purposes, located in Sections 13, 14, 23, and 24, T9N, R22E, Haskell County, Oklahoma, as shown on the map marked **Exhibit E**, attached hereto.

AREA 727
This area contains approximately **70** acres, of which approximately 70 acres are useable for the authorized purposes, located in Sections 16 and 21, T9N, R22E, Haskell County, Oklahoma, as shown on the map marked **Exhibit F**, attached hereto.

THE FOLLOWING AREAS ARE AVAILABLE FOR AGRICULTURAL PURPOSES ONLY:

AREA 1647-2
This area contains approximately **14** acres, of which approximately 10 acres are useable for the authorized purposes, located in Section 29, T12N, R21E, Muskogee County, Oklahoma, as shown on the map marked **Exhibit G**, attached hereto.

ROBERT S. KERR LOCK AND DAM PROJECT
LAND USE REGULATIONS
GRAZING OR HAY HARVESTING PURPOSES
AREAS: 148, 261, 346, 713 AND 727

1. Pasture: In order to reduce soil erosion, improve grass species, and maintain a reasonable amount of cover for wildlife on the lease area, vegetative height requirements must be observed. Failure to comply with these requirements may be cause for revocation of the lease. In order to maintain the desired cover during periods of extreme weather conditions, the lessee may be required to remove all or part of the livestock from the area.

2. Vegetative Height Requirements: Vegetative heights for grass in open pasture areas must be maintained as follows:

a. Introduced grasses – 4 inch height (minimum in any area).
b. Native grasses – 6 inch height (minimum in any area).

3. Grazing Schedule: Grazing will be authorized for 12 months per year.

4. Stocking Rates: The stocking rate list is as follows:

AREA 148 - A maximum of **13** animal units per year.
AREA 261 - A maximum of **21** animal units per year.
AREA 346 - A maximum of **3** animal units per year.
AREA 713 - A maximum of **7** animal units per year.
AREA 727 - A maximum of **6** animal units per year.

5. Animal Units: Animal units are defined as follows:

Cow and unweaned calf	1.0 AU
Weaned calf to yearling (400 to 700 lbs.)	0.5 AU
Steer, heifer or bull, 1-2 years old (over 700 lbs.)	1.0 AU

6. Hay Meadow: Grazing **will not** be permitted on areas used for harvesting hay. Only **one (1)** hay cutting per year is authorized. All harvesting operations shall be completed on or before **August 31** each year. All equipment and baled hay shall be removed on or before **August 31** each year. Cutting height must be maintained at no less than **four (4)** inches above the ground.

7. Pesticides:

a. The term "pesticide" means (1) any substance or mixture of substances intended for preventing, destroying, repelling any pest, and/or (2) any substance or mixture of substances intended for use as a plant regulator, defoliant, or desiccant. This term includes but is not limited to fungicides, herbicides, insecticides, larvicides, rodenticides, and adjunct or mixtures of the same materials.

b. The use or application of any and all pesticides or herbicides is prohibited unless specific written approval is granted by the Lake Manager after consultation with the District's Environmental Compliance Coordinator. Written approval shall be granted for a period of time not to exceed one (1) year maximum. If the application of pesticides or herbicides is approved, the lessee must, without fail, provide a written record to the Lake Manager within ten (10) days of the date of application.

8. <u>Cultural Resources Requirements</u>: All agricultural and grazing activities will utilize existing land improvements, including roads, paths, fences, ponds, clearings, fields, firebreaks, etc. The lessee shall not construct new land improvements or improve existing land improvements without submitting a formal written request to the **Robert S. Kerr** Lake Office. Requests for improvements will follow Tulsa District's standard outgrant approval process. Formal approval will be required prior to the commencement of any improvement activities.

9. Any deviation from the above requirements must be approved in writing by the Chief of Real Estate.

ROBERT S. KERR LOCK AND DAM PROJECT
LAND USE REGULATIONS
AGRICULTURAL PURPOSES
AREA 1647-2

1. Pasture: In order to reduce soil erosion, improve grass species, and maintain a reasonable amount of cover for wildlife on the lease area, vegetative height requirements must be observed. Failure to comply with these requirements may be cause for revocation of the lease. In order to maintain the desired cover during periods of extreme weather conditions, the lessee may be required to remove all or part of the livestock from the area.

2. Vegetative Height Requirements: Vegetative heights for grass in open pasture areas must be maintained as follows:

a. Introduced grasses – 4 inch height (minimum in any area).
b. Native grasses – 6 inch height (minimum in any area).

3. Grazing: Grazing may be utilitized in accordance with standard agronomic practices.

4. Pesticides:

a. The term "pesticide" means (1) any substance or mixture of substances intended for preventing, destroying, repelling any pest, and/or (2) any substance or mixture of substances intended for use as a plant regulator, defoliant, or desiccant. This term includes but is not limited to fungicides, herbicides, insecticides, larvicides, rodenticides, and adjunct or mixtures of the same materials.

b. The use or application of any and all pesticides or herbicides is prohibited unless specific written approval is granted by the Lake Manager after consultation with the District's Environmental Compliance Coordinator. Written approval shall be granted for a period of time not to exceed one (1) year maximum. If the application of pesticides or herbicides is approved, the lessee must, without fail, provide a written record to the Lake Manager within ten (10) days of the date of application.

5. Cultivated Land: Practice minimum and stubble mulching tillage to reduce wind and water erosion.

6. Cultural Resources Requirements: All agricultural and grazing activities will utilize existing land improvements, including roads, paths, fences, ponds, clearings, fields, firebreaks, etc. The lessee shall not construct new land improvements or improve existing land improvements without submitting a formal written request to the **Robert S. Kerr** Lake Office. Requests for improvements will follow Tulsa District's standard outgrant approval process. Formal approval will be required prior to the commencement of any improvement activities.

7. Any deviation from the above requirements must be approved in writing by the Chief of Real Estate.

SPECIAL LEASE REQUIREMENTS

FENCING: The specific area to be fenced will be designated by the Lake Manager or his authorized representative. Fencing must be constructed and maintained in accordance with the attached Fencing Specifications. Materials will be provided by the U.S. Army Corps of Engineers.

AREA 148
The lessee will be required to construct approximately **2,000** linear feet of fence **per 5-year term**. A minimum of **400** feet of fence must be completed not later than **December 1st** each year of the lease. Approximate location of fence is shown on map marked **Exhibit B**, attached hereto.

AREA 261
The lessee will be required to construct approximately **2,500** linear feet of fence **per 5-year term**. A minimum of **500** feet of fence must be completed not later than **December 1st** each year of the lease. Approximate location of fence is shown on map marked **Exhibit C**, attached hereto.

AREA 346
The lessee will be required to construct approximately **1,000** linear feet of fence **per 5-year term**. A minimum of **200** feet of fence must be completed not later than **December 1st** each year of the lease. Approximate location of fence is shown on map marked **Exhibit D**, attached hereto.

AREA 713
The lessee will be required to construct approximately **2,000** linear feet of fence **per 5-year term**. A minimum of **400** feet of fence must be completed not later than **December 1st** each year of the lease. Approximate location of fence is shown on map marked **Exhibit E**, attached hereto.

AREA 727
The lessee will be required to construct approximately **1,500** linear feet of fence **per 5-year term**. A minimum of **300** feet of fence must be completed not later than **December 1st** each year of the lease. Approximate location of fence is shown on map marked **Exhibit F**, attached hereto.

AREA 1647-2
The lessee will be required to construct approximately **250** linear feet of fence **per 5-year term**. A minimum of **50** feet of fence must be completed not later than **December 1st** each year of the lease. Approximate location of fence is shown on map marked **Exhibit G**, attached hereto.

Directions to the Tulsa District

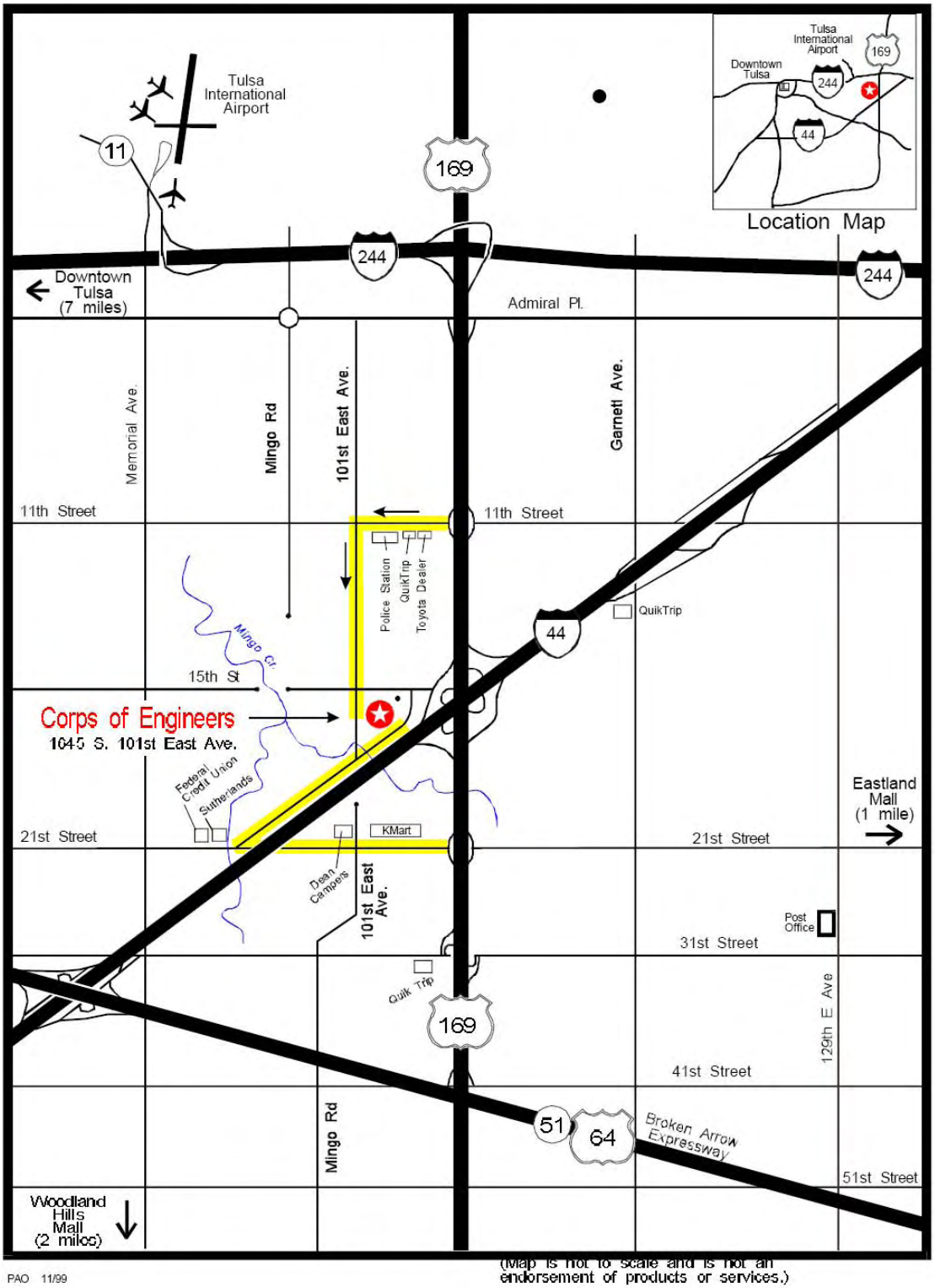

PAO 11/99

(Map is not to scale and is not an endorsement of products or services.)

Exhibit A

FENCING SPECIFICATIONS

INSTALLATION

1. Fence Location. All boundary fences shall be offset approximately 1 foot onto Government property and shall become the property of the U.S. Government.

2. Setting Post. All wooden posts shall be set with the large end down in true line on the side to which wire is to be attached. Posts shall be imbedded in the ground to the depth shown on the drawings and shall be well tamped and firmly set. End, corner, and gate posts shall be set in concrete as indicated in the drawings. Posts and brace panels shall be securely braced, as indicated on the drawings, by a timber brace gained into the post and securely spiked. Double No. 9 gauge wire shall be twisted taut between pole in accordance with drawings. Line posts shall be set not more than 16 feet center to center. Metal and wood posts shall be set as shown on the drawings.

3. Stretching Barbed Wire. Barbed wire shall be stretched uniformly tight, spaced as indicated on the drawings, and attached to the wooden post with one staple, except the top wire, which shall be double stapled. Staples shall be set diagonally with the wood grain and driven tight. Standard wire fasteners will be used to attach the wire to all steel posts. Wire shall be made by the side of the post away from the area enclosed. Splices shall be made by bolt clamp of an approved type or a wire splice made in the following manner: the ends of the wire shall be carried three (3) inches past the splicing tools and wrapped around both wires backward from the tool for at least five (5) turns and, after the tool is removed, the space occupied by it shall be closed by pulling the ends together. Intermediate stay wires shall be installed where indicated on the drawings.

4. Intermediate brace panels shall be located at any major division in horizontal or vertical alignment or on straight runs over ¼ mile (1,320’) in length.

5. Fence measurement shall be made by the total linear feet of fence installed.

6. Materials List.

   a. Barbed Wire, 4 Pt, 12½ gauge
   b. Steel “T” Post (6½ ft)
   c. Fasteners
   d. Wire Stays
   e. Wooden Post (5” Dia x 8 ft)
   f. Staples, 1¼ inch, 9 gauge g. Nails
   h. Smooth Wire, 9 gauge soft wire

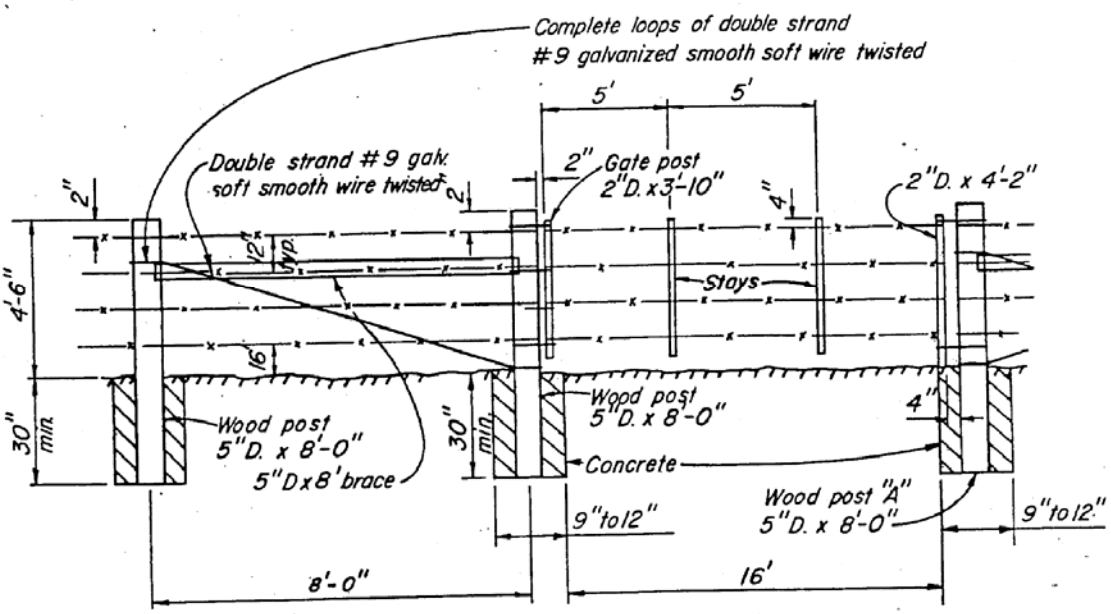

END(GATE) BRACE PANEL FIELD GATE

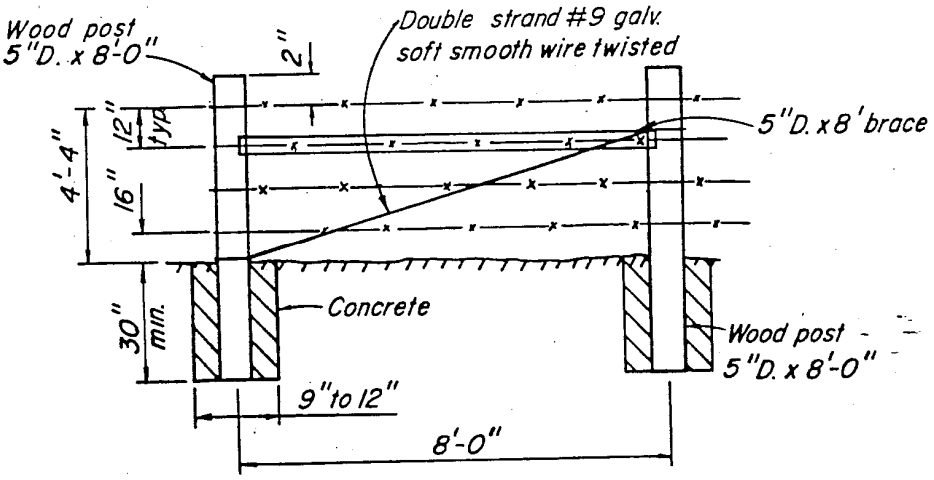

SINGLE BRACE CORNER PANEL

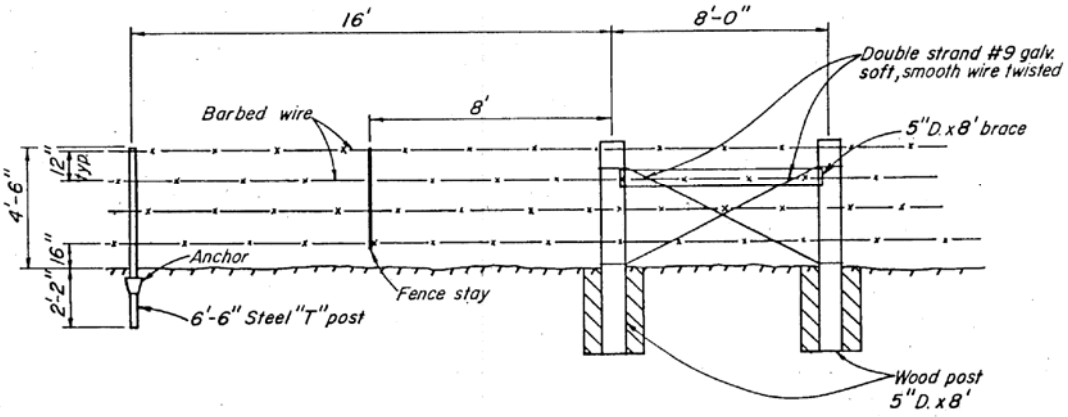

LINE PANEL

INTERMEDIATE BRACE PANELS
(1320' INTERVALS)

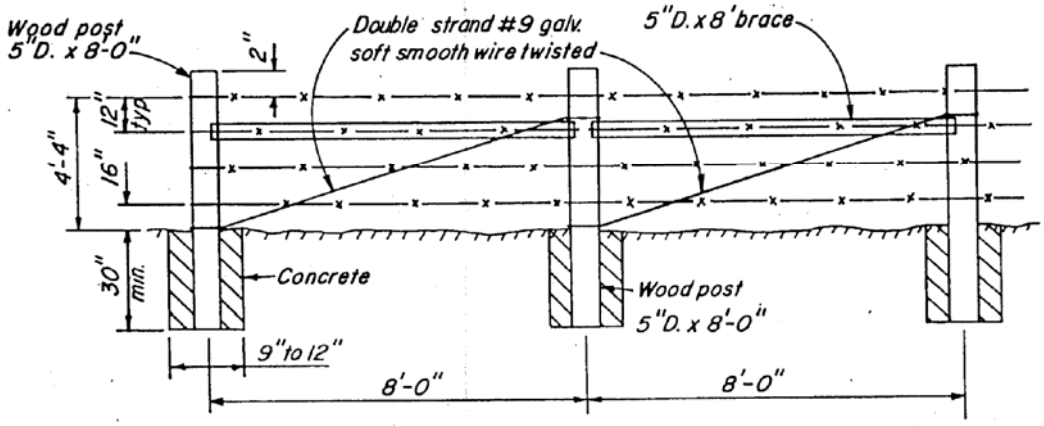

DOUBLE BRACE CORNER PANEL

FOR LONG LINES 1 MILE OR MORE

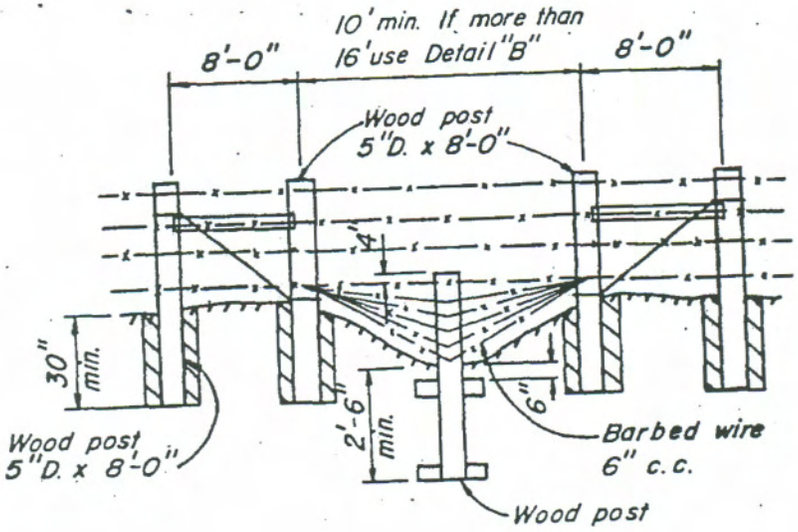

DETAIL "A"

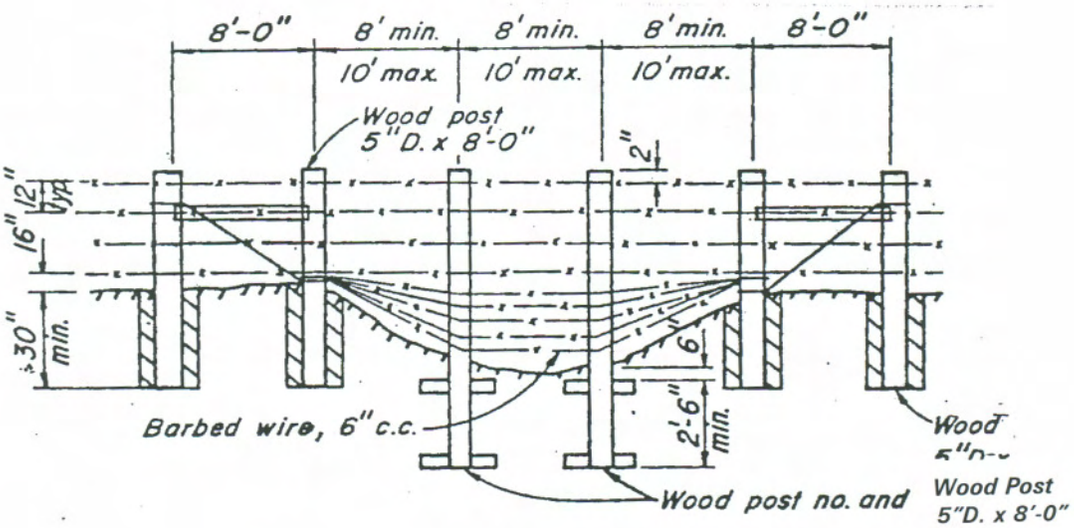

Wood post no. and length as required

B"

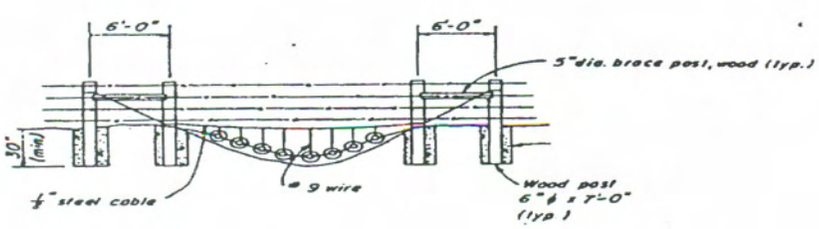

NOTES:

1. Suspend cable 5' above stream bed.
2. Suspend fires to a distance of 6" above stream bed..
3. Use wire to secure end tires to brace posts .
4. Use wire to secure tires together.

Exhibit B

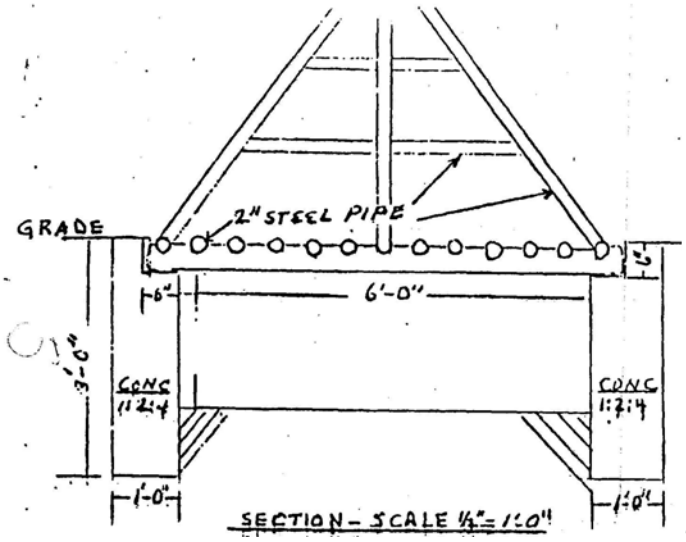

SPECIFICATIONS – Steel Pipe Cattle Guard

Stringers – 5" Used

Filler – 2" Used

Fabrication – Cut 5" Stringers 1" to Receive 2" Filler Pipe – 5" O.C. SPACING

Electric Weld All Joints.

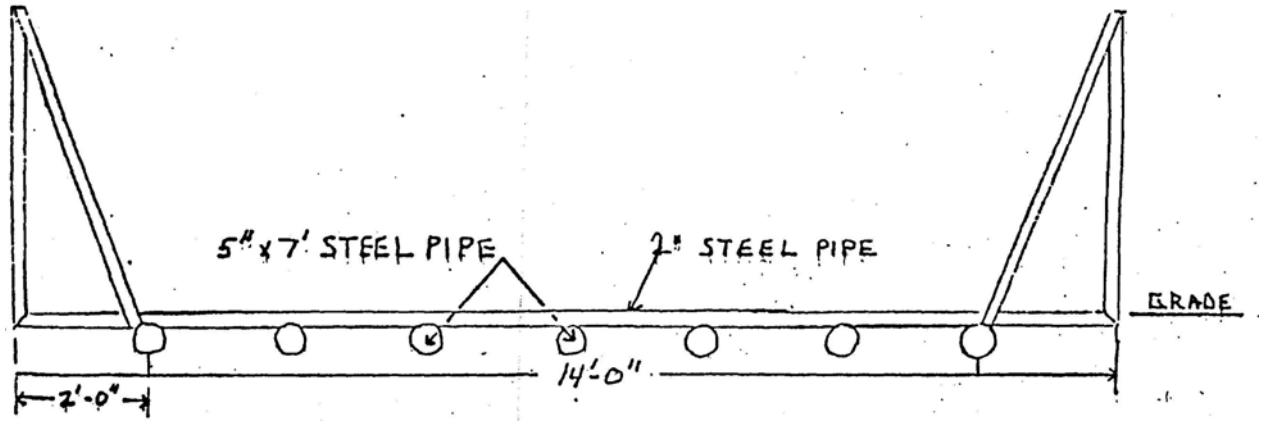

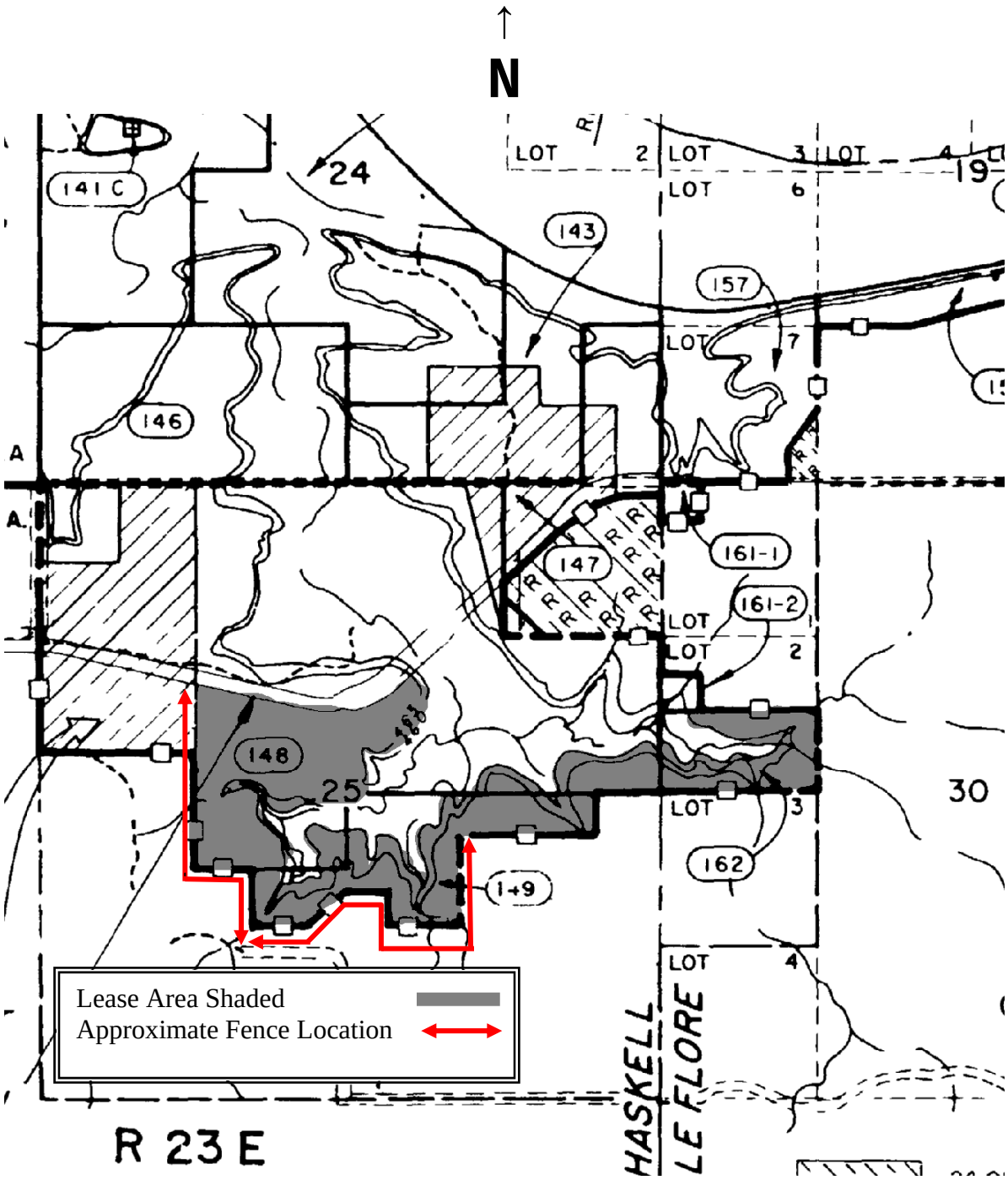

Section 25, T10N, R23E and Section 30, T10N, R24E

OVERFLOW _____ ACRES

NON-OVERFLOW AREA _____ ACRES

Haskell and LeFlore COUNTIES

STATE OF Oklahoma

TOTAL LEASE AREA **130.00** ACRES

PROJECT: ROBERT S. KERR LOCK & DAM

NOL CONTRACT No. DACW56-9-09-017

LEASE AREA **148**

U. S. ARMY CORPS OF ENGINEERS
TULSA DISTRICT

EXHIBIT B

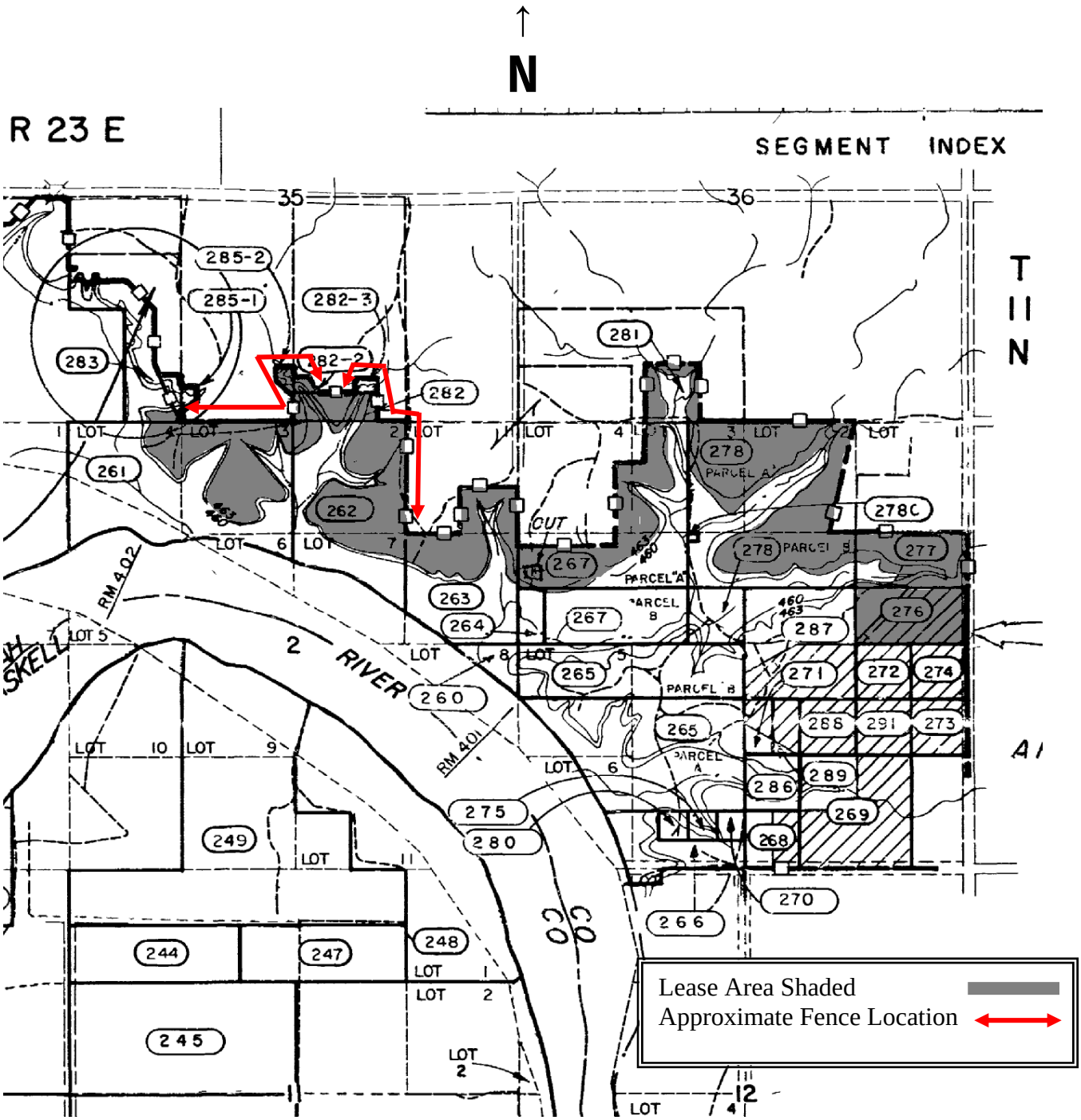

Sections 1 & 2, T10N, R23E and Sections 35 & 36, T11N, R23E

OVERFLOW _____ ACRES

NON-OVERFLOW AREA _____ ACRES

Sequoyah COUNTY

STATE OF Oklahoma

TOTAL LEASE AREA **220.00** ACRES

PROJECT: ROBERT S. KERR LOCK & DAM

NOL CONTRACT No. DACW56-9-09-017

LEASE AREA **261**

U. S. ARMY CORPS OF ENGINEERS
TULSA DISTRICT

EXHIBIT C

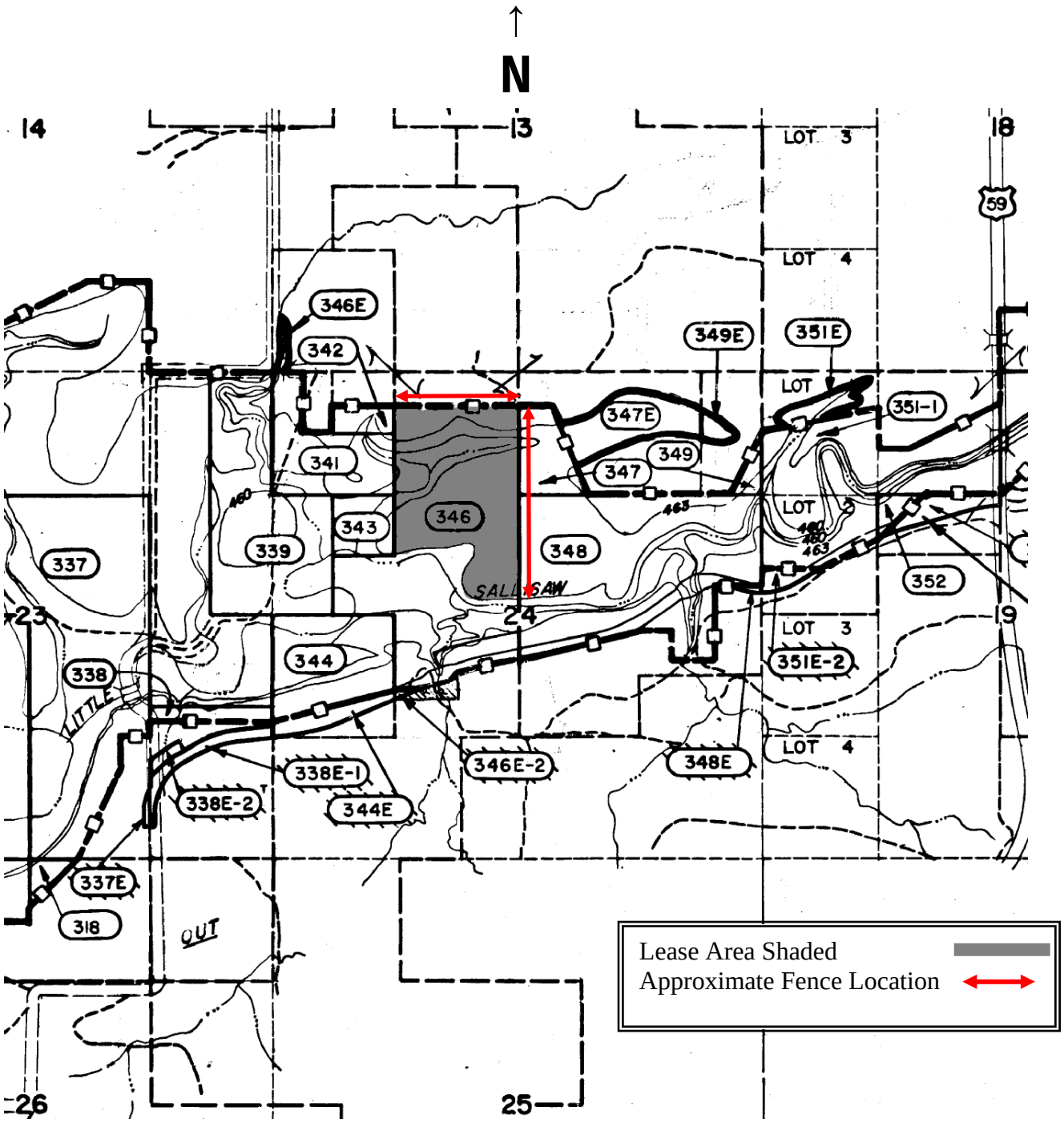

Section 24, T11N, R23E

OVERFLOW _____ ACRES

NON-OVERFLOW AREA _____ ACRES

Sequoyah COUNTY

STATE OF Oklahoma

TOTAL LEASE AREA **20.00** ACRES

PROJECT: ROBERT S. KERR LOCK & DAM

NOL CONTRACT No. DACW56-9-09-017

LEASE AREA **346**

U.S. ARMY CORPS OF ENGINEERS
TULSA DISTRICT

EXHIBIT D

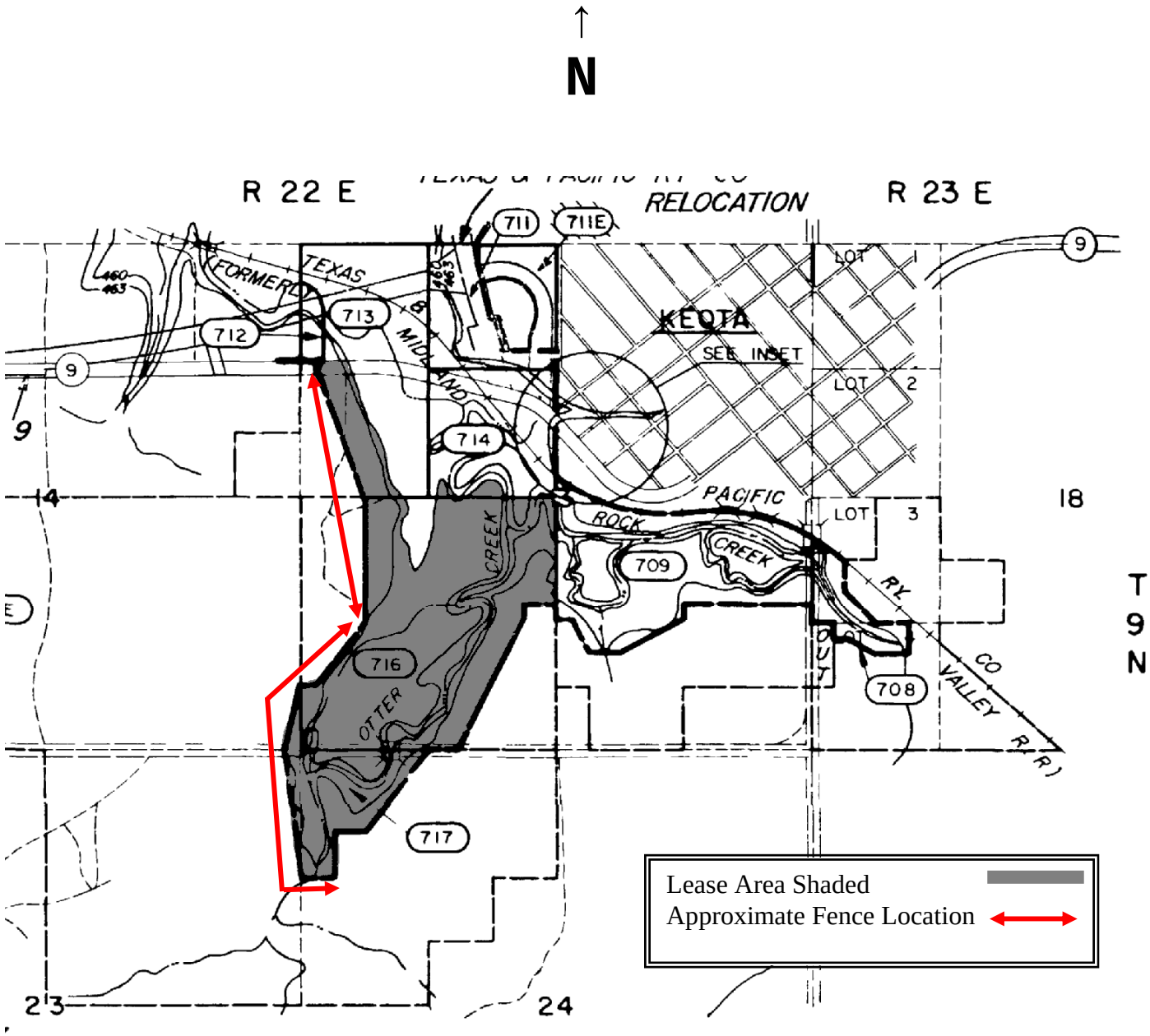

Lease Area Shaded

Approximate Fence Location

Sections 13, 14, 23 and 24, T9N, R22E

OVERFLOW _____ ACRES	PROJECT: ROBERT S. KERR LOCK & DAM
NON-OVERFLOW AREA _____ ACRES	NOL CONTRACT No. DACW56-9-09-017
Haskell COUNTY	LEASE AREA **713**
STATE OF Oklahoma	
TOTAL LEASE AREA **100.00** ACRES	U. S. ARMY CORPS OF ENGINEERS TULSA DISTRICT

EXHIBIT E

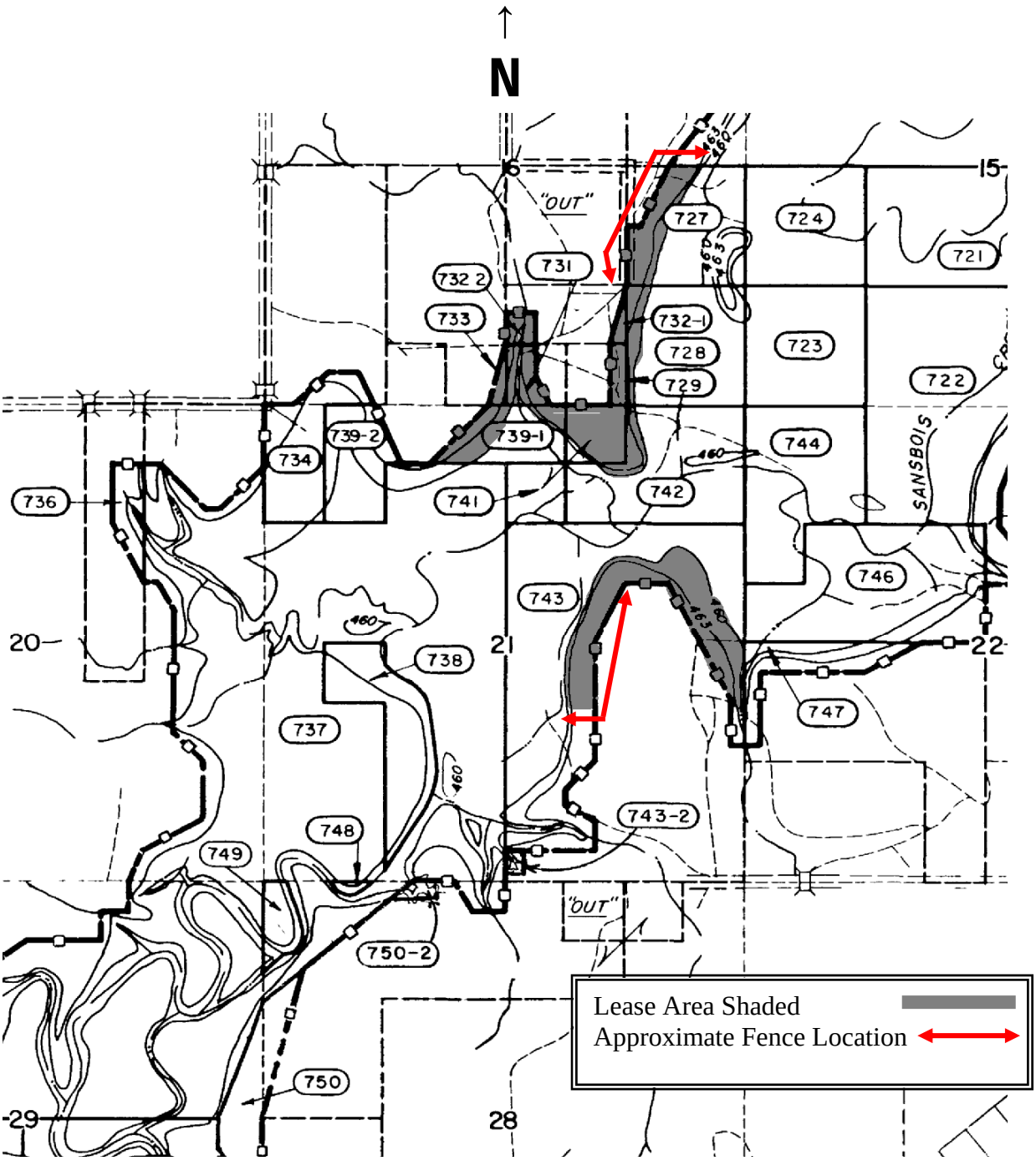

Sections 16 and 21, T9N, R22E

OVERFLOW _____ ACRES	PROJECT: ROBERT S. KERR LOCK & DAM
NON-OVERFLOW AREA _____ ACRES	NOL CONTRACT No. DACW56-9-09-017
Haskell COUNTY	LEASE AREA **727**
STATE OF Oklahoma	U. S. ARMY CORPS OF ENGINEERS TULSA DISTRICT
TOTAL LEASE AREA **70.00** ACRES	

EXHIBIT F

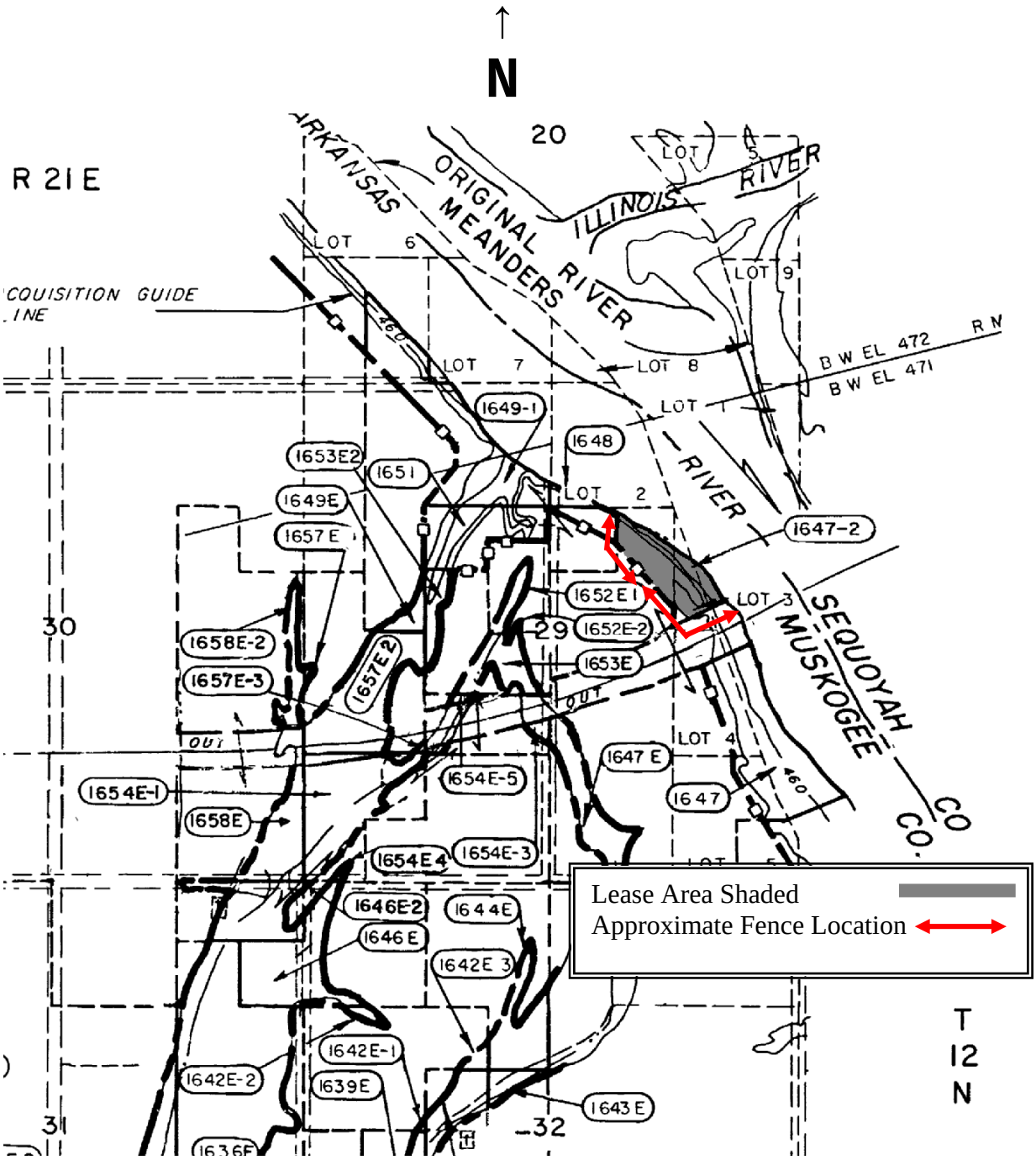

Section 29, T12N, R21E

OVERFLOW _____ ACRES	PROJECT: ROBERT S. KERR LOCK & DAM
NON-OVERFLOW AREA _____ ACRES	NOL CONTRACT No. DACW56-9-09-017
Muskogee COUNTY	LEASE AREA **1647-2**
STATE OF Oklahoma	U. S. ARMY CORPS OF ENGINEERS TULSA DISTRICT
TOTAL LEASE AREA **14.00** ACRES	

EXHIBIT G

NOTICE FOR A&G LEASE OFFERS - ROBERT S. KERR LOCK AND DAM
NOL No. DACW56-9-09-017

TO: A&G LEASE OFFERS
Corps of Engineers
ATTN: Real Estate Division
1645 South 101st East Avenue
Tulsa, OK 74128

This offer is subject to all conditions and requirements in the Notice of Leasing. I agree to enter into a written lease within 30 days of notice of acceptance. Enclosed is my offer deposit in the form of a check or money order made payable to the "FAO, USAED, TULSA" for one-fourth (1/4) of my annual offer or more. Note, rent must be bid in whole dollars.

AREA	ANNUAL RENTAL OFFER	OFFER DEPOSIT ENCLOSED
148	$	$
261	$	$
346	$	$
713	$	$
727	$	$
1647-2	$	$

NOTE: SERVICE STATED IN THE NOTICE OF LEASING FOR OFFERS ARE REQUIRED IN ADDITION TO THE CASH RENT OFFER. The annual rent will be due and payable on or before December 31 each year during the term of the lease.

Full Name: _____

Address: _____ **Telephone:** (____)_____
(Street, Rural Route P.O. Box, etc.) **w/ area code**

_____ **Zip Code:** _____
(City, State)

Social Security No.: _____-_____-_____

NOTE: By signing this offer I agree to and understand all requirements as stated and set out in this Notice of Leasing.

Signature: _____ **Date:** _____

BIDDER REPRESENTS: (Check appropriate box)

That he/she operates as:

___ an individual only

___ a joint tenancy as husband and wife with right of survivorship - **If joint tenancy please print spouse's name** _____

___ an individual doing business as _____

___ a partnership consisting of _____

___ a corporation, incorporated in the state of _____

___ a trustee acting for_____

COMPLETE THIS FORM IF YOU ARE SUBMITTING THIS OFFER AS A CORPORATE ENTITY.

CORPORATE CERTIFICATE

I, _____, certify that I am the _____
(Name) **(Secretary or Attesting Officer)**

of the _____**,** named as grantee/lessee/licensee herein;
(Corporation Name)

that _____, who signed this Agreement on behalf
(Officer Name)

of said _____, was then _____
(Corporation Name) **(Officer Title)**

of the Corporation; and that said Agreement was duly signed for and on behalf of

the _____ by authority of its governing body and is within the
(Corporation Name)

scope of its corporate powers.

Signed, _____
Secretary or Attesting Officer **(AFFIX CORPORATE SEAL)**

This form certifies that the person signing the attached instrument has the authority to do so. The signature of the Secretary/Attesting Officer and the Individual signing the attached instrument cannot be the same.

COMPLETE THIS FORM IF YOU ARE SUBMITTING THIS OFFER AS A GOVERNMENTAL ENTITY.

CERTIFICATE OF AUTHORITY

I, _____, certify that I am the _____
(Name) **(Secretary or Attesting Officer)**

of the _____, named as Grantee/Lessee/Licensee herein;
(Agency Name)

that _____, who signed this Agreement on behalf of said
(Officer Name)

_____, was then _____
(Agency Name) **(Officer Title)**

Of the Agency; and that said Agreement was duly signed for and on behalf of the

_____ by authority of its governing body and is within scope of its
(Agency Name)

statutory powers.

Signed, _____ Date _____

This form certifies that the person signing the attached instrument has the authority to do so. The signature of the Secretary/Attesting Officer and the Individual signing the attached instrument cannot be the same.

COMPLETE THIS FORM ONLY IF YOU ARE SUBMITTING YOUR OFFER AS A PARTNERSHIP.

PARTNERSHIP CERTIFICATE

I, _____**,** certify that I am the General Partner
(Name of Partner - 1)

in the Partnership named as Grantee in the attached outgrant, I certify further that

_____, who signed said outgrant on behalf of the
(Name of Partner - 2)

Partnership, is also a General Partner and has the authority to bind the Partnership by

virtue of the powers vested in him/her in the Partnership agreement.

_____
PARTNER'S NAME

(The Partner that signed attached instrument cannot sign Certificate)

This form certifies that the person signing the attached instrument has the authority to do so. The signature of the Partner signing this form and the Partner signing the attached instrument cannot be the same.

REQUEST FOR GRANTEE

SOCIAL SECURITY NUMBER AND/OR TAXPAYER IDENTIFICATION NUMBER

Nature of Outgrant: Notice of Leasing
(EASEMENT, LEASE, LICENSE, PERMIT, RIGHT OF WAY, ETC.)

Number of Outgrant: DACW56-9-09-017

Name of Grantee: _____
(PRINT NAME)

Address of Grantee: _____

_____

Grantee's Social Security Number: _____

Grantee's Taxpayer Identification Number: _____

_____ _____
SIGNATURE *DATE*

PRIVACY ACT STATEMENT

Purpose of Form: This information is mandatory under the Debt Collection Improvement Act of 1996, Public Law 104-134, April 26, 1996, 110 Stat 1321-358. The head of each Federal Agency must require each person doing business with that agency to furnish to that agency such person's taxpayer identification number. The agency intent is to use such number for purposes of collecting and reporting on any delinquent amounts arising out of such person's relationship with the Government. OMB Circular A-129, App. A, part V, and DOD Financial Regulation 7000.14-R, Vol. 4, chapter 3, states that any close-out of accounts receivable procedures will include reporting the close-out amount on IRS Form 1099-C. IRS Form 1099-C is an income form which requires a taxpayer identification number and means that the agency will report the uncollectible debt to IRS as income to the person who failed to pay the uncollectible debt owed to the agency under the outgrant. The 1099-C reports the uncollectible debt as income to the debtor, which may be taxable at the debtor's current tax rate. Failure to provide this information may result in your outgrant request being denied.

U.S. Army Corps of Engineers, Tulsa District

DRAFT FOR INFORMATIONAL PURPOSES ONLY

NO. DACW56-1-*-*

DEPARTMENT OF THE ARMY LEASE
FOR AGRICULTURAL OR GRAZING PURPOSES
LOCATED ON
*** LAKE**
**** COUNTY, STATE**

THIS LEASE, made on behalf of the United States, between the **SECRETARY OF THE ARMY**, hereinafter referred to as the Secretary, and *, *; hereinafter referred to as the Lessee,

WITNESSETH:

That the Secretary, by authority of Title 10, United States Code, Section 2667, and for the consideration set forth herein, hereby leases to the Lessee the following described property hereinafter referred to as the premises, for * purposes, and in accordance with the land use regulations identified in Exhibit(s) *, which is attached hereto and made a part hereof:

Competitive

AREA *, containing * acres, more or less, in * County, *, as shown on the map marked Exhibit *, attached hereto, and by this reference made a part hereof.

THIS LEASE is granted subject to the following conditions:

1. TERM

Said premises are hereby leased for a term of * (months)(years), beginning *, 20*, and ending *, *, [and may be renewed for an additional 5 years in accordance with condition 33], but revocable at will by the Secretary.

2. CONSIDERATION

***A.** (Use, if there will be no rental offsets) The Lessee shall pay rental in advance to the United States in the amount of * AND NO/100 DOLLARS ($*), payable * to the order of the Finance and Accounting Officer, Tulsa District, and delivered to 1645 S 101 East Ave, Tulsa, OK 74128-4609.

A. (Alternate Condition) (Use, if there will be rental offsets) As consideration for this lease, the Lessee shall pay cash rental in advance to the United States in the amount of * AND NO/100 DOLLARS,($*), payable * to the order of the Finance and Accounting Officer, Tulsa District, and delivered to 1645 S 101 East Ave, Tulsa, OK 74128-4609. Such cash rental shall be offset by the value of work items which shall be accomplished by the Lessee for the maintenance, protection, repair, restoration, and improvement of the leased premises as described in the Land Use Regulations attached as Exhibit *.

B. All rent and other payments due under the terms of this lease must be paid on or before the date they are due in order to avoid the mandatory sanctions imposed by the Debt Collection Act of 1982, (31 U.S.C. Section 3717). This statute requires the imposition of an interest charge for the late

payment of debts owed to the United States; an administrative charge to cover the costs of processing and handling delinquent debts; and the assessment of an additional penalty charge on any portion of a debt that is more than 90 days past due. The provisions of the statute will be implemented as follows:

(1) The United States will impose an interest charge, the amount to be determined by law or regulation, on late payment of rent. Interest will accrue from (the due date) (the later of the due date or the date notification of the amount due is mailed to the Lessee). An administrative charge to cover the cost of processing and handling each late payment will also be imposed.

(2) In addition to the charges set forth above, the United States will impose a penalty charge of six percent (6%) per annum on any payment or portion thereof, more than ninety (90) days past due. The penalty shall accrue from the date of delinquency and will continue to accrue until the debt is paid in full.

(3) All payments received will be applied first to any accumulated interest, administrative and penalty charges and then to any unpaid rental or other payment balance. Interest will not accrue on any administrative or late payment penalty charge.

3. NOTICES

All correspondence and notices to be given pursuant to this lease shall be addressed, if to the lessee, to *, and if to the United States, to the District Engineer, Attention: Chief, Real Estate Division, 1645 South 101st East Avenue, Tulsa, OK 74128-4609, or as may from time to time otherwise be directed by the parties. Notice shall be deemed to have been duly given if and when enclosed in a properly sealed envelope, or wrapper, addressed as aforesaid, and deposited, postage prepaid, in a post office regularly maintained by the United States Postal Service.

4. AUTHORIZED REPRESENTATIVES

Except as otherwise specifically provided, any reference herein to "Secretary", "District Engineer", or "said officer", include their duly authorized representatives. Any reference to "Lessee" shall include any sublessees, assignees, transferees, successors and their duly authorized representatives.

5. SUPERVISION BY THE *(DISTRICT ENGINEER) (INSTALLATION COMMANDER)

The use and occupation of the premises shall be subject to the general supervision and approval of the *(District Engineer) (Installation Commander), Tulsa *(District)(Installation) hereinafter referred to as said officer, and to such rules and regulations as may be prescribed from time to time by said officer.

6. APPLICABLE LAWS AND REGULATIONS

The Lessee shall comply with all applicable Federal, state, county and municipal laws, ordinances and regulations wherein the premises are located.

7. CONDITION OF PREMISES

The Lessee acknowledges that it has inspected the premises, knows its condition, and understands that the same is leased without any representation or warranties whatsoever and without obligation on the part of the United States to make any alterations, repairs or additions thereto.

8. TRANSFERS AND ASSIGNMENTS

Without prior written approval of the District Engineer, the Lessee shall neither transfer nor assign this lease, nor sublet the premises or any part thereof, nor grant any interest, privilege or license whatsoever in connection with this lease. Failure to comply with this condition shall constitute a noncompliance for which the lease may be revoked immediately by the District Engineer.

9. PROTECTION OF PROPERTY

The Lessee shall keep the premises in good order and in a clean, safe condition by and at the expense of the Lessee. The Lessee shall be responsible for any damage that may be caused to property of the United States by the activities of the Lessee under this lease, and shall exercise due diligence in the protection of all property located on the premises against fire or damage from any and all other causes. Any property of the United States damaged or destroyed by the Lessee incident to the exercise of the privileges herein granted shall be promptly repaired or replaced by the Lessee to a condition satisfactory to said officer, or at the election of said officer, reimbursement made therefor by the Lessee in an amount necessary to restore or replace the property to a condition satisfactory to said officer.

10. RENTAL ADJUSTMENT

In the event the United States revokes this lease or in any other manner materially reduces the leased area or materially affects its use by the Lessee prior to the expiration date, an equitable adjustment will be made in the rental paid or to be paid under this lease. Where the said premises are being used for farming purposes, the Lessee shall have the right to harvest, gather and remove such crops as may have been planted or grown on said premises, or the District Engineer may require the Lessee to vacate immediately and, if funds are available, compensation will be made to the Lessee for the value of the remaining crops. Any adjustment of rent or the right to harvest, gather and remove crops shall be evidenced by a written supplemental agreement, executed by the District Engineer; PROVIDED, however, that none of the provisions of this paragraph shall apply in the event of revocation because of noncompliance by the Lessee with any of the terms and conditions of this lease and in that event any remaining crops shall become property of the United States upon such revocation.

11. RIGHT TO ENTER AND FLOOD

A. The right is reserved to the United States, its officers, agents and employees to enter upon the premises at any time and for any purposes necessary or convenient in connection with government purposes; to make inspections; to remove timber or other materials, except property of the Lessee; to flood the premises; to manipulate the level of the lake or pool in any manner whatsoever, and/or to make any other use of the lands as may be necessary in connection with government purposes, and the Lessee shall have no claims for damages on account thereof against the United States or any officer, agent or employee thereof.

B. The Lessee expressly agrees to make no claim under flood insurance issued under any Federal Government program for loss to any property of the Lessee located on the premises which arises from or is incident to the flooding of the premises by the Government.

12. INDEMNITY

The United States shall not be responsible for damages to property or injuries to persons which may arise from or be incident to the exercise of the privileges herein granted, or for damages to the property of the Lessee, or for damages to the property or injuries to the person of the Lessee's officers, agents or employees or others who may be on the premises at their invitation or the invitation of any one of them, and the Lessee shall hold the United States harmless from any and all such claims not including damages due to the fault or negligence of the United States or its contractors.

13. RESTORATION

On or before the expiration of this lease or its termination by the Lessee, the Lessee shall vacate the premises, remove the property of the Lessee and restore the premises to a condition satisfactory to said officer. If, however, this lease is revoked, the Lessee shall vacate the premises, remove said property and restore the premises to the aforesaid condition within such time as the said officer may designate or as otherwise specified by the provisions of the condition on **RENTAL ADJUSTMENT.** In either event, if the Lessee shall fail or neglect to remove said property and restore the premises, then, at the option of said officer, the property shall either become the property of the United States without compensation therefor, or the said officer may cause the property to be removed and no claim for damages against the United States or its officers or agents shall be created by or made on account of such removal and restoration work. The Lessee shall also pay the United States on demand any sum which may be expended by the United States after the expiration, revocation or termination of this lease in restoring the premises.

14. NON-DISCRIMINATION

The Lessee shall not discriminate against any person or persons or exclude them from participation in the Lessee's operations, programs or activities conducted on the leased premises, because of race, color, religion, sex, age, handicap or national origin.

15. SUBJECT TO EASEMENTS

This lease is subject to all existing easements, or those subsequently granted, as well as, established access routes for roadways and utilities located, or to be located, on the premises, provided that the proposed grant of any new easement or route will be coordinated with the Lessee, and easements will not be granted which will, in the opinion of the District Engineer, interfere with the use of the premises by the Lessee.

16. SUBJECT TO MINERAL INTERESTS

This lease is subject to all outstanding mineral interests. As to federally owned mineral interests, it is understood that they may be included in present or future mineral leases issued by the Bureau of Land Management (BLM) which has responsibility for mineral development of Federal lands. The Secretary will provide lease stipulations to BLM for inclusion in said mineral leases that are

designed to protect the premises from activities that would interfere with the Lessees operations or would be contrary to local law.

17. TERMINATION

This lease may be terminated by the Lessee at any time by giving at least sixty (60) days notice thereof, in writing, to the District Engineer. In the case of such termination, no refund by the United States of any rental previously paid shall be made and payment in full of all rent becoming due during the period of notice will be required. In the event the effective date of termination occurs after the start of the grazing, planting or harvesting season as specified in the Land Use Regulations, any rent due for the balance of the annual term, or the rental due for the remaining term, if the lease is for less than one year, shall be due and payable on or before the date of such termination.

18. PROHIBITED USES

A. Certain soil conservation practices may be required by the land use regulations which are identified as rental offsets. By acceptance of such offsets, the Lessee agrees that he will not accept any Federal or State cost-sharing payments or subsidies for the same soil conservation practices.

B. The Lessee shall not construct or place any structure, improvement or advertising sign or allow or permit such construction or placement without prior written approval of the District Engineer.

19. PROTECTION OF NATURAL RESOURCES

The Lessee shall use the premises in accordance with the attached Land Use Regulations and shall at all times: (a) maintain the premises in good condition and free from weeds, brush, washes, gullies and other erosion which is detrimental to the value of the premises for agricultural purposes; (b) cut no timber, conduct no mining or drilling operations, remove no sand, gravel or kindred substances from the premises; commit no waste of any kind nor in any manner substantially change the contour or condition of the premises except changes required to accomplish soil and water conservation measures as may be authorized by said officer.

20. DISPUTES *(To be added once a high offer is obtained)*

21. ENVIRONMENTAL PROTECTION

A. Within the limits of their respective legal powers, the parties to this lease shall protect the premises against pollution of its air, ground and water. The Lessee shall comply with any laws, regulations, conditions or instructions affecting the activity hereby authorized if and when issued by the Environmental Protection Agency, or any Federal, state, interstate or local governmental agency having jurisdiction to abate or prevent pollution. The disposal of any toxic or hazardous materials within the premises is specifically prohibited. Such regulations, conditions or instructions in effect or prescribed by the said Environmental Protection Agency, or any Federal, state, interstate or local governmental agency are hereby made a condition of this lease. The Lessee shall not discharge waste or effluent from the premises in such a manner that the discharge will contaminate streams or other bodies of water or otherwise become a public nuisance.

B. The Lessee will use all reasonable means available to protect the environment and natural resources, and where damage nonetheless occurs arising from activities of the Lessee, the Lessee shall be liable to restore the damaged resources.

C. The Lessee must obtain approval in writing from said officer before any pesticides or herbicides are applied to the premises.

22. ENVIRONMENTAL BASELINE SURVEY

An Environmental Baseline Survey (EBS) documenting the known history of the property with regard to the storage, release or disposal of hazardous substances thereon, is attached hereto and made a part hereof as **Exhibit ***. Upon expiration, revocation or termination of this lease, another EBS shall be prepared which will document the environmental condition of the property at that time. A comparison of the two surveys will assist the District Engineer in determining any environmental restoration requirements. Any such requirements will be completed by the lessee in accordance with the condition on **RESTORATION**.

23. HISTORIC PRESERVATION

The Lessee shall not remove or disturb, or cause or permit to be removed or disturbed, any historical, archeological, architectural or other cultural artifacts, relics, remains or objects of antiquity. In the event such items are discovered on the premises, the Lessee shall immediately notify said officer and protect the site and the material from further disturbance until said officer gives clearance to proceed.

24. SOIL AND WATER CONSERVATION

The Lessee shall maintain, in a manner satisfactory to said officer, all soil and water conservation structures that may be in existence upon the premises at the beginning of or that may be constructed by the Lessee during the term of this lease, and the Lessee shall take appropriate measures to prevent or control soil erosion within the premises. Any soil erosion occurring outside the premises resulting from the activities of the Lessee shall be corrected by the Lessee as directed in writing by the District Engineer.

25. TAXES

Any and all taxes imposed by the state or its political subdivisions upon the property or interest of the Lessee in the premises shall be promptly paid by the Lessee. If and to the extent that the property owned by the Government is later made taxable by State or local governments under an Act of Congress, the lease shall be renegotiated.

26. COVENANT AGAINST CONTINGENT FEES

The Lessee warrants that no person or selling agency has been employed or retained to solicit or secure this lease upon an agreement or understanding for a commission, percentage, brokerage or contingent fees, excepting bona fide employees or established commercial or selling agencies maintained by the Lessee for the purpose of securing business. For breach or violation of this warranty, the United States shall have the right to annul this lease without liability or, in its discretion,

to require the Lessee to pay, in addition to the lease rental or consideration, the full amount of such commission, percentage, brokerage or contingent fee.

27. OFFICIALS NOT TO BENEFIT

No member of or delegate to congress or resident commissioner shall be admitted to any share or part of this lease or to any benefits to arise therefrom. However, nothing herein contained shall be construed to extend to any incorporated company if this lease is for the general benefit of such corporation or company.

28. SEVERAL LESSEES

If more than one Lessee is named in this lease, the obligations of said Lessees herein named shall be joint and several obligations.

29. MODIFICATIONS

This lease contains the entire agreement between the parties hereto, and no modifications of this agreement, or waiver, or consent hereunder shall be valid unless the same be in writing, signed by the parties to be bound or by a duly authorized representative and this provision shall apply to this condition as well as other conditions of this lease.

30. DISCLAIMER

This lease is effective only insofar as the rights of the United States in the premises are concerned. The Lessee shall obtain any permit or license which may be required by Federal, state or local statute in connection with the use of the premises. It is understood that the granting of this lease does not preclude the necessity of obtaining a Department of the Army permit for activities which involve the discharge of dredge or fill material or the placement of fixed structures in the waters of the United States, pursuant to the provisions of Section 10 of the Rivers and Harbors Act of 3 March 1899 (33 USC 403), and Section 404 of the Clean Waters Act (33 USC 1344).

31. HUNTING AND FISHING ENTRY

That the lessee will cooperate in programs for the management and improvement of fish and wildlife, and in furtherance thereof, the leased premises will be subject to free public use for fishing and hunting.

32. CEMETERY FENCES

That the lessee shall construct and maintain fences, enclosing all cemeteries or graves within the leased area, and shall permit ingress and egress thereto.

33. RIGHT OF RENEWAL WITHOUT COMPETITION

The United States may renew this lease by mutual agreement with the current lessee if the lease term stated above expressly authorizes renewal, the lessee's performance is satisfactory, and the value as determined by the United States Government is acceptable.

DRAFT FOR INFORMATIONAL PURPOSES ONLY.

THIS LEASE is not subject to Title 10, United States Code, Section 2662, as amended.

IN WITNESS WHEREOF I have hereunto set my hand by direction of he Secretary of the Army this ___ day of _____, 20____.

_____

IDA LAFAYETTE
CHIEF, MANAGEMENT AND DISPOSAL BRANCH
TULSA DISTRICT, CORPS OF ENGINEERS

THIS LEASE is also executed by the Lessee this ____ day of _____, 20___.

_____
Lessee's Name

_____
Phone Number