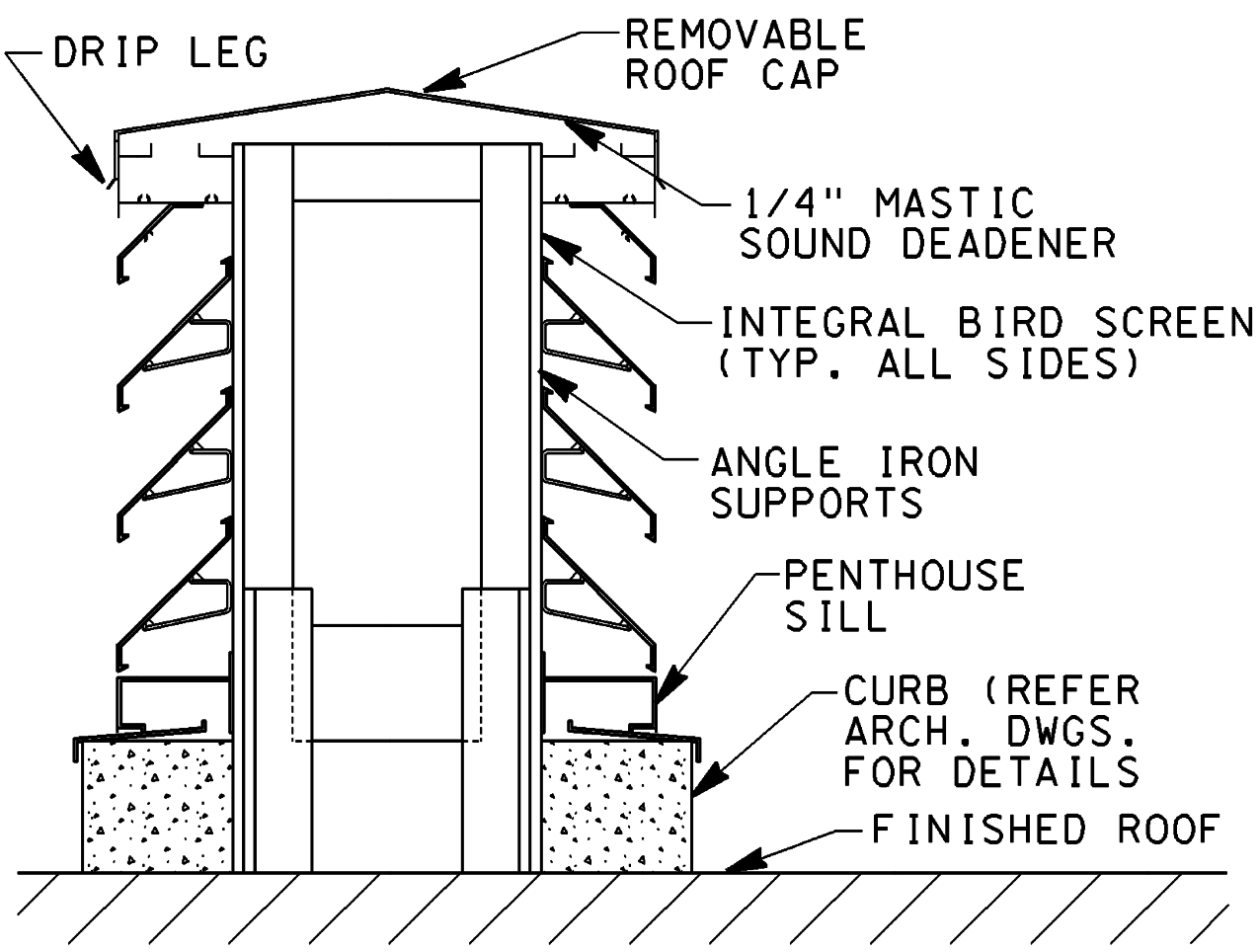

1 2 A002 A002

INTAKE AIR PENTHOUSE DETAIL

NTS

SAMPLE

U.S. ARMY CORPS OF ENGINEERS, TULSA DISTRICT

TULSA CADD	PROJECT TITLE ADDITIONAL PROJECT DEFINITION	
	DESIGNER:JOHN Q. GOVERNMENT	DATE:8/13/03
	AMEND. #:0001 SKETCH # 01	SHT. #1 of 2

stdeamnd Printed by m5anglia on Wednesday August 20 2003 at 08:24:47 AM CDT