Typical Crossection

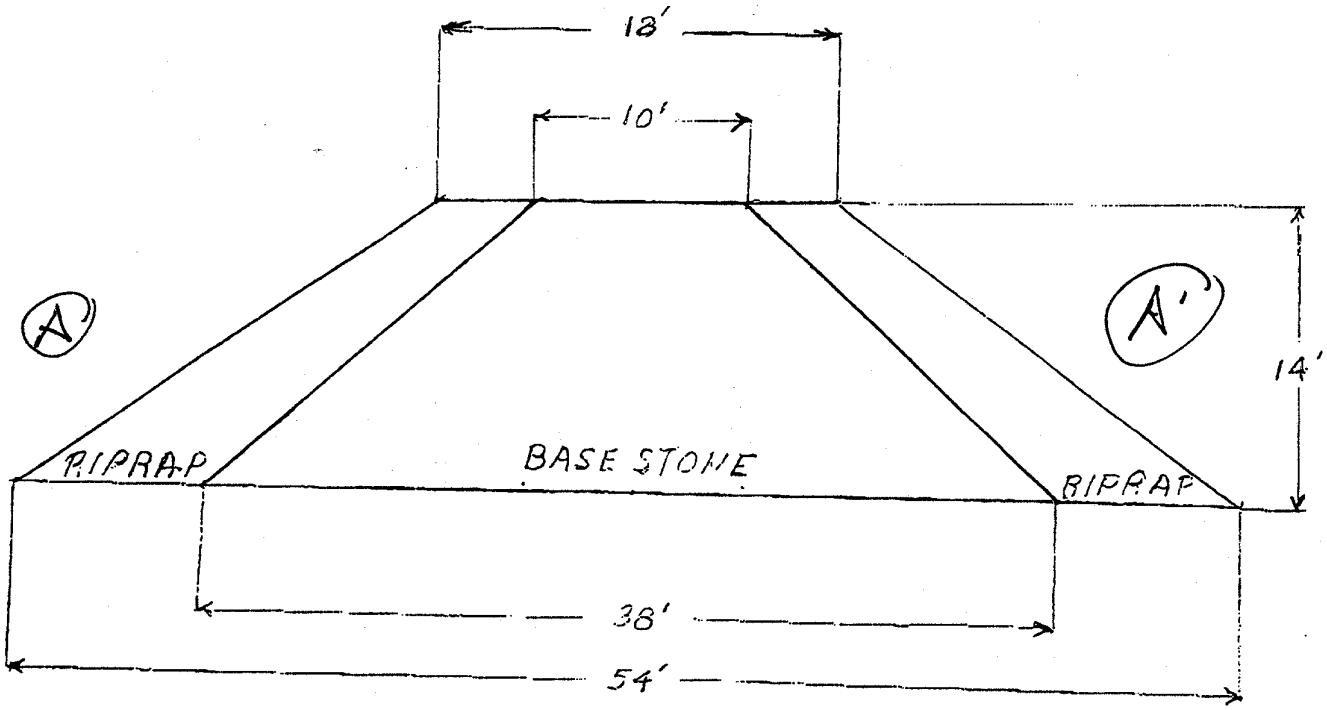

Scale: $\frac{1}{8}$" = 1'

OKR2009344
OAK HILLS MARINA
LAKE TEXOMA
ROCK JETTY
ENCLOSURE 3 OF 3